NO. 39 NOTES FROM THE SHOP $2.50

Woodsmith®

Woodsmith®

Number 39 May/June, 1985

Editor
Donald B. Peschke

Design Director
Ted Kralicek

Assistant Editors
Steve Krohmer
Douglas L. Hicks
Douglas M. Lidster

Art Director
Kay Mulder

Technical Illustrators
David Kreyling
Mike Henry

Subscription Manager
Sandy J. Baum

Subscription Assistants
Christel Miner
Vicky Robinson
Jackie Stroud
Diana Starr

Computer Operations
Ken Miner

Circulation Manager
Jeff Farris

Administrative Assistant
Cheryl Scott

Building Maintenance
Archie Krause

WOODSMITH (ISSN 0164-4114) is published bimonthly (January, March, May, July, September, November) by Woodsmith Publishing Co., 2200 Grand Ave., Des Moines, Iowa 50312.
WOODSMITH is a registered trademark of the Woodsmith Publishing Co.
©**Copyright 1985** by Woodsmith Publishing Co. All Rights Reserved.
Subscriptions: One year (6 issues) $10, Two years (12 issues) $18. Single copy price, $2.50 (Canada and Foreign: add $2 per year.)
Change Of Address: Please be sure to include both your old and new address.
Second class postage paid at Des Moines, Iowa.
Postmaster: Send change of address notice, Form 3579, to Woodsmith Publishing Co., 2200 Grand Ave., Des Moines, Iowa 50312.

BACK ISSUES

All back issues of *Woodsmith* are still available. Send for a free booklet describing the contents and prices of all back issues.

SAMPLE COPIES

If you have a friend who would like to see a copy of **Woodsmith**, just send the name and address, and we'll send a sample (at no cost).

Sawdust

ABOUT THIS ISSUE. Custom made. When you say those words, you're usually talking about something pretty fancy. But if I were to say "custom-made dowels," that just sounds like a lot of work that should be avoided.

But that's what I needed to build the "breakfast in bed" tray shown in this issue. Normally, building a project that involves a lot of dowels is not a big deal.

Birch dowels are available everywhere. And if you get tired of birch, there are some sources for oak, walnut and cherry dowels. But I wanted to build the tray out of red gum. That meant making my own custom-made dowels.

I used a jig that one of our readers (Lloyd Dickinson) sent in way back in *Woodsmith* No. 19. With a little modification, Lloyd's jig was ready for the router table, and I was ready to make dowels.

Of course, I couldn't stop there. I had to make another jig to cut the square stock needed to make the dowels. Now I was rolling. I made a third jig to cut a kerf in the end of the dowel so I could tap a small wedge in place to tighten the dowel in the hole.

With each step came a new jig. This is a common theme in woodworking. In fact, I think most of my time in the shop is spent figuring out a way to make some process easier or more accurate.

SCRAPER. That was certainly the case when I was in the shop sharpening a scraper recently. (A scraper is just a 3"x5" piece of tempered steel with a cutting burr burnished on the edge, see the article on page 11.)

For years I've used the same technique for sharpening a scraper. Then Doug Lidster joined the group here at *Woodsmith*. (See New Faces at the end of this article.)

Doug and I were down in the shop and the subject of scrapers came up. We were talking about what kind of file to use to square up the edge of the scraper.

Then the conversation turned to technique. How do you hold the file to make sure you're filing an edge that's perfectly square to the face of the scraper?

I've always relied on "touch." Some way I just kind of know when I'm filing a square edge. At least, I just kind of know about 75% of the time. There are plenty of days when my "touch" is off a degree or two.

That's when Doug suggested switching things around. "Why not hold the file steady and move the scraper back and forth? It might be more accurate. All you'd have to do is build a little jig . . ."

My eyes lit up at the mention of building yet another jig. A few minutes later we had the new jig. It was just a piece of wood with a groove cut in it to hold the edge of the file. But it worked.

Then, with a few more cuts on the table saw and a couple carriage bolts, the other edge of this piece of wood was transformed into a jig to clamp the scraper in position when the edge is "rolled" to form a cutting burr. Two jigs in one. I was in heaven.

Okay, maybe I'm getting carried away a little. But I am kind of excited about the jigs and techniques we used to build the projects in this issue.

Figuring out how to accomplish a task is one of the challenges in woodworking. And coming up with a way (a jig or a technique) to make that task easier or more accurate makes the whole process very rewarding.

TIPS. In addition to the jigs mentioned above, there are several problem-solving tips and techniques scattered throughout this issue. For example, I had to drill a hole for a dowel in the end of a long, narrow piece of stock.

For years I've struggled with a less-than-perfect set-up on the drill press. Then it finally dawned on me that if I just clamped the piece in a woodworking vise to hold it vertically, I could use a Portalign to drill the hole. (This is shown in Fig. 2 on page 19.)

This little technique is not what you'd call an earth-shattering discovery, but I was delighted when I finally figured it out. And that's the kind of experience that proves that you can't let little problems get you down. If you stick with it long enough, the answer will come.

GLIDER. Every spring, about the time the tulips begin to bloom, you see the latest crop of porch swings in front of all the lumber yards and hardware stores. This year, I finally decided it was time to stop looking at them and build my own.

But instead of hanging it on the porch, I wanted to put it under my favorite shade tree in the back yard. This meant building a glider frame. Now, with the swing mounted as a glider, I can sit and swing and pursue my favorite pastime . . . watching the neighbors mow their lawns.

NEW FACES. Doug Lidster has joined the editorial staff here at *Woodsmith*. Doug spent the past year as editor of *Gun Dog* magazine. Now he's signed on here and is putting his woodworking skills (he has carved and finished gun stocks as a hobby for the past 30 years) to use on some larger projects. We're glad to have him with us.

NEXT MAILING. The July/August issue of *Woodsmith* will be mailed during the week of August 13, 1985.

Tips & Techniques

3-STEP CLEANING SYSTEM

To clean dirty brushes, I've developed a three-step system. I use three peanut butter jars or one-pound coffee cans with lids and fill each about one-third full with the appropriate solvent.

I wash my brushes in series starting with container #1 and ending with container #3. When container #1 gets dirty, I clean it up, refill with solvent, and rotate it into the #3 position.

Using this system I always end up with the cleanest solvent on my brush last.

Ernest L. Klindt
Bethany, Missouri

JIG FOR STOPPED ROUTER CUTS

The problem I've always had with stopped cuts on the router table is getting the correct setup. I have to look all over my shop for long lost C-clamps and then find some scrap blocks of wood to clamp to the fence as stops.

Then I get it all set up only to find that one of the blocks is 1/16" off. This means I have to loosen the clamp and try to move it over exactly 1/16" and then reclamp it in the new spot. All of this finally got too frustrating and led to the development of this jig.

I noticed that the *back* of my router table fence wasn't serving any useful purpose. But if I attached a jig to it, I could turn it around to the front when I wanted

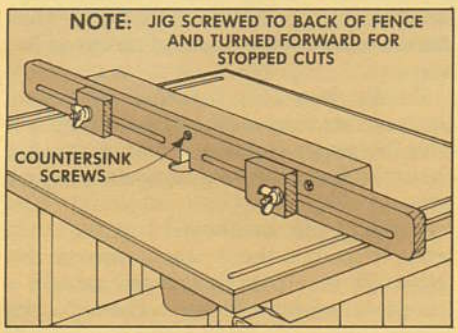

to use it and turn it back when I wanted it out of the way.

I started by making an auxiliary fence that was about 36" long (though it could be any length). I routed two 3/8"-wide slots through it that run from a point close to the center of the length to near each end. Then on the back I routed a 7/8"-wide by 1/4"-deep groove centered over the slot. This forms a "T" that will accept the head and shaft of a 3/8" carriage bolt.

The stop blocks are 2 1/4" x 3" and have a 3/8"-diameter hole drilled in them that lines up with the slot in the auxiliary fence. (I drilled these holes off center so I could turn them around to get a little more distance if I needed it.)

Sawdust reliefs are routed (with a cham-

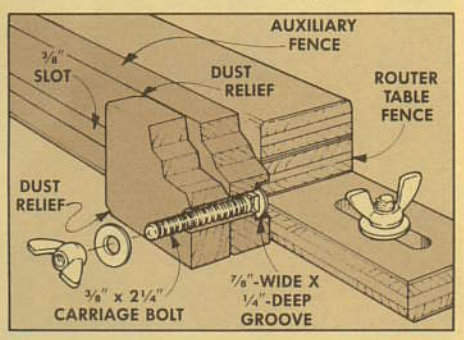

fer bit) on the bottom and one side of the stop block and on the bottom edge of the auxiliary fence. Also, a notch is cut out, centered on the bottom edge of the auxiliary fence, as an opening for the router bit. Then the stop blocks are attached with 3/8" carriage bolts, washers, and wing nuts.

Finally, the new jig is screwed securely to one side of the router table fence. Fine adjustments are easily made by loosening the wing nut, moving the block, and retightening.

E.H. Caron
Luling, Texas

BLACKBOARD ERASER SANDER

A common felt blackboard eraser makes a simple and inexpensive sanding block. When sanding a flat surface, I fold a quarter sheet of sandpaper in half and wrap it over the top of the eraser. The top surface provides just the right amount of "give." For removing sharp corners or smoothing curved surfaces, I wrap the sandpaper around the eraser's soft edges.

Jim Gage
Oregon City, Oregon

THREADED INSERTS, AN ENCORE

The methods explained in past *Woodsmith* articles for installing threaded inserts have been helpful, but sometimes they don't meet my needs. There are times when I want to put an insert in a location where I can't use a drill press (The method recommended in *Woodsmith* No. 30). And I'm sure some of your readers don't even have a drill press.

I recently put some inserts in the top of my hardwood workbench and came upon the idea of using a socket wrench. It gave me sufficient power to drive the insert into hardwood. At the same time I was able to keep the insert aligned vertically.

Start by buying a short hexhead bolt that will screw into the internal threads of the insert. The bolt should be the same length or shorter than the combined length of the insert and the depth of the socket.

Screw a nut onto the bolt so the distance from the top of the bolt head to the bottom of the nut is the same as the depth of the socket. Finally, insert the bolt and nut into the socket, add a washer as a buffer, and then screw the insert onto the bolt.

Now, attach the ratchet handle of the socket wrench. One hand applies downward pressure to keep the insert vertical while the other turns the handle. With a ratchet you can always have it positioned for the best leverage.

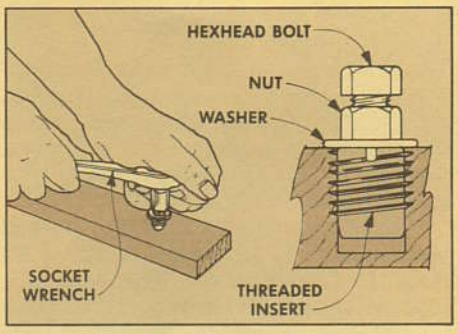

Once the top of the insert is even with the surface, loosen the nut with an open-end wrench and remove the bolt.

Craig Sanders
Minneapolis, Minnesota

Editor's Note: We tried Mr. Sanders' method and found it works fine. But sometimes the insert needs to be slightly below the surface. Then we find it useful to work with a double insert arrangement. One insert rests tightly against the bolt head and presses the other one down below the surface. It's also a little easier to get this arrangement started since you don't have to fumble around lining up the bolt head along with a nut inside the socket.

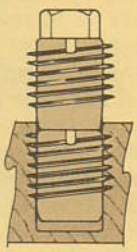

SEND IN YOUR IDEAS

If you'd like to share a woodworking tip with other readers of *Woodsmith*, send your idea to: *Woodsmith*, Tips & Techniques, 2200 Grand Ave., Des Moines, Iowa 50312.

We pay a minimum of $10 for tips, and $15 or more for special techniques (that are accepted for publication). Please give a complete explanation of your idea. If a sketch is needed, send it along; we'll draw a new one.

Porch Swing

SIT AND SWING AWHILE

On a hot summer's night a lot of folks cool down by going inside, turning on the air conditioner, and reclining in the La-Z-Boy to watch reruns on T.V. But it wasn't always this way.

There was a time when air conditioning meant a cool glass of lemonade and a porch swing. And the entertainment was just swinging and watching the world go by. That's my kind of fun.

I made this swing just like the one I remember. It's designed so it can hang from chains on a porch, or it can be mounted to a stand as a glider. This article covers the swing, the next explains the glider.

THE SUPPORTS

The swing's seat is made of thin slats supported by three L-shaped seat frames, refer to Fig. 8. Each of the seat frames consists of a back support (A) and a seat support (B) that are joined together with an angled half-lap joint.

I began by cutting the back supports and seat supports to rough length out of 5/4 stock (1 1/16" thick actual). The three back supports (A) are 2¼" wide by 24" long and the three seat supports (B) are 3¼" wide by 24" long, see Fig. 1.

ANGLED HALF-LAPS. When all six pieces are cut to size, the angled half-laps that join them together can be cut with a dado head on the table saw. Set the height of the dado head to half the stock's thickness.

To cut the angled half-laps, start by putting a pencil mark on the edge of one piece, 3½" from the end. (Note: This measurement makes the half-lap more than long enough to make the joint. The excess is cut off after the joint is assembled.)

To hold the workpiece steady as the cuts are made, I attached an auxiliary fence and stop block to the miter gauge, see Fig. 2. Set the miter gauge at 75° (tipped 15° to the right) and place the workpiece (the one with the pencil mark on it) against the fence. Now line up the pencil mark with the *left* side of the dado head, and clamp a stop block to the fence at the *right* end of the set-up piece.

With the saw set up, make a series of passes over the dado head moving the workpiece to the left until the half-lap extends to the end. Cut the same half-lap on one end of all six support pieces.

CUT TO LENGTH. With the angled half-laps complete, the supports can be cut to final length. The important distance is from the heel of the half-lap to the far end. Trim the back supports (A) to final length so this distance is 17", and the seat supports (B) to length so this distance is 18", see Fig. 1.

SEAT SUPPORT TEMPLATE. Next, I cut the top edge of the seat supports (B) so the slats would form a comfortable curved shape. To get this curved shape, I made a cardboard template, see Detail in Fig. 3.

Tape a 12" x 24" piece of cardboard to the top of the workbench. Then the template is laid out so the bottom edge of the seat support is on the long (24") edge.

To form the curved top edge of the pattern, strike two large arcs (8" and 12" radii) using the focal points shown in Fig. 3. Then draw a tangent line connecting these two arcs.

Finally, draw a line from the back edge of the template to intersect with the back arc. This line is parallel to and 2¼" up (toward the arcs) from the seat support's bottom edge.

Cut out the cardboard template and trace it on the three seat supports (B). (Note: Be sure that the curved pattern is traced on the correct edge — the edge with

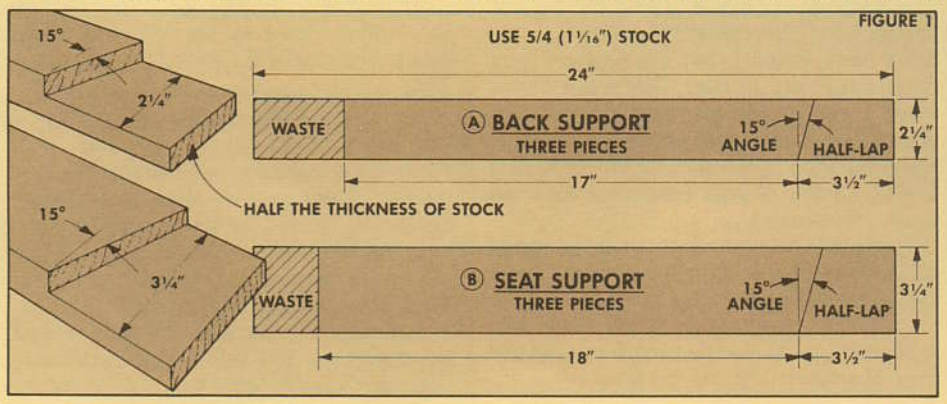

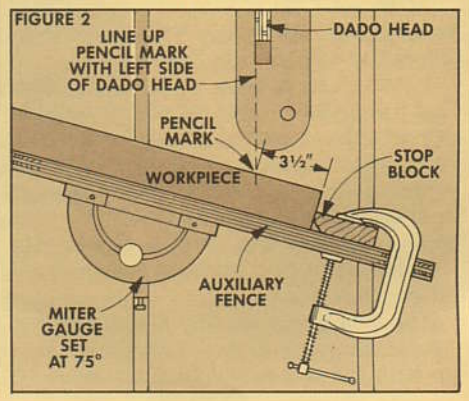

the long point of the angled half-lap, refer to Fig. 3. The heel of the half-lap should be on the bottom edge.) Then cut the top edge of the seat supports to shape.

NOTCHING THE SEAT SUPPORTS. Next, cut ½"-deep notches in the bottom edge of each seat support wide enough to accept cross supports (F) that are added later, see locations of notches in Fig. 3.

CUTTING THE BACK SUPPORT. Making the back support (A) is much simpler. Draw and cut out a gentle curve starting 6" from the top front corner, see Fig. 3. (Once again, be sure it's on the correct edge — the one with the long point of the half-lap.)

JOINING THE SUPPORTS

Now the completed seat and back supports can be glued together at the half-laps. To give them additional strength, I added two ⅜" dowel pins to each joint.

Start by locating the centerpoints of the holes for the dowel pins, see Fig. 4. Then use a C-clamp to hold the two pieces together, and drill two ⅜" holes through both pieces, see Fig. 5. Spread glue on two ⅜" dowel pins and in the joint, reclamp, and drive the pins into the holes.

When the glue is dry, saw off the pins close to the surface, see Fig. 6. Then use a sharp chisel to trim them off perfectly flush with the surface.

Finally, the excess length of the half-laps can be cut off the seat and back supports. Trim off the "ears" that extend beyond the joint, and round the bottom corner to a 2¼" radius, see Fig. 7.

THE PILOT HOLES

The seat frames are complete at this point, but before adding the slats I marked and drilled the location of the pilot holes.

The pilot holes are centered on the thickness of the stock and spaced along the seat frame at the measurements shown in Fig. 8. (Note: The distances between the holes in the seat support are not uniform to compensate for the curved shape of the top edge. However, using the measurements given results in a uniform ½" gap between the slats.)

The easiest way to mark the hole locations is to lay out the marks along the bottom (straight) edge of one frame, and then square up to the top (curved) edge of this frame. Then clamp the three frames together and use the marks on the first frame to square across the curved top edges of all three frames at the same time, see Detail A, Fig. 8.

To mark the center of the thickness, use a combination square, see Detail B. Set the square just a little less than half the thickness, measure in from each side, and put marks. Then, split the difference between the marks to locate the exact center. After the centerpoints are marked, drill ⅛" pilot holes, ¾" deep at each point.

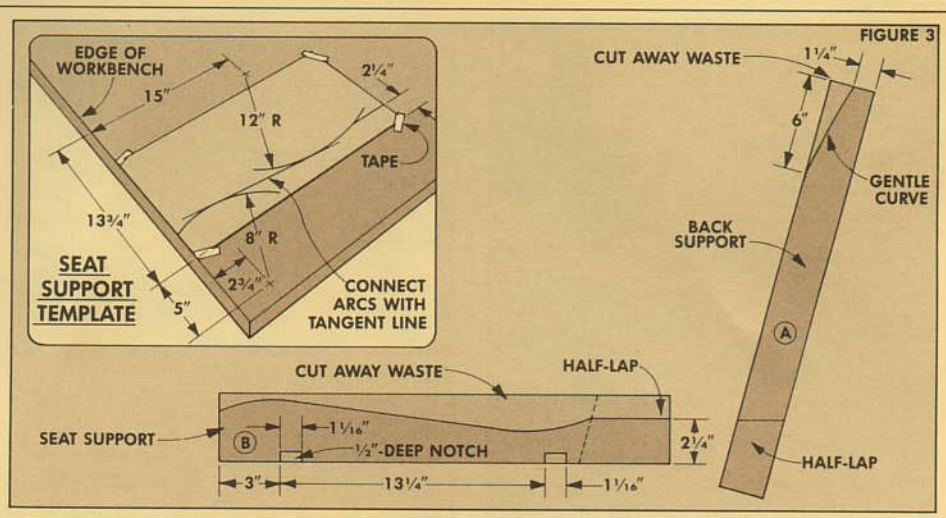

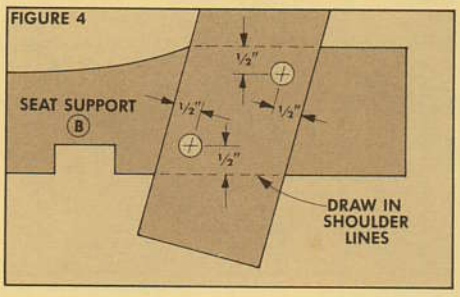

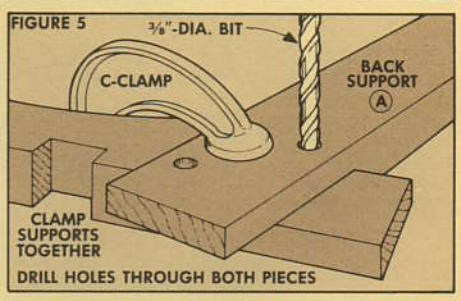

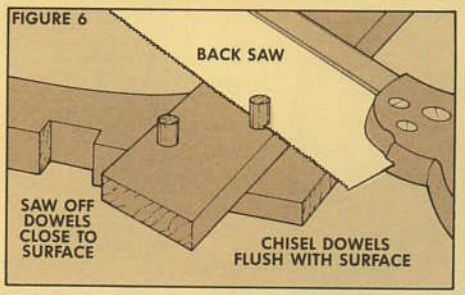

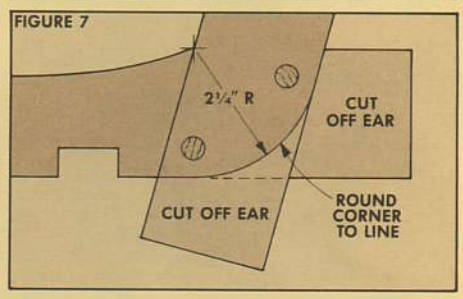

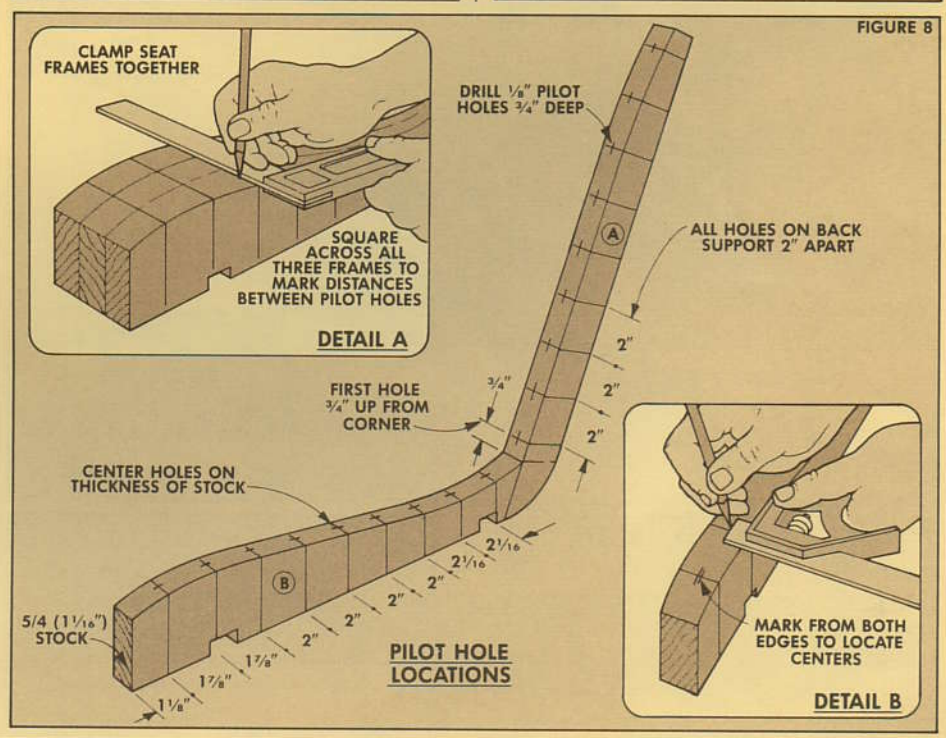

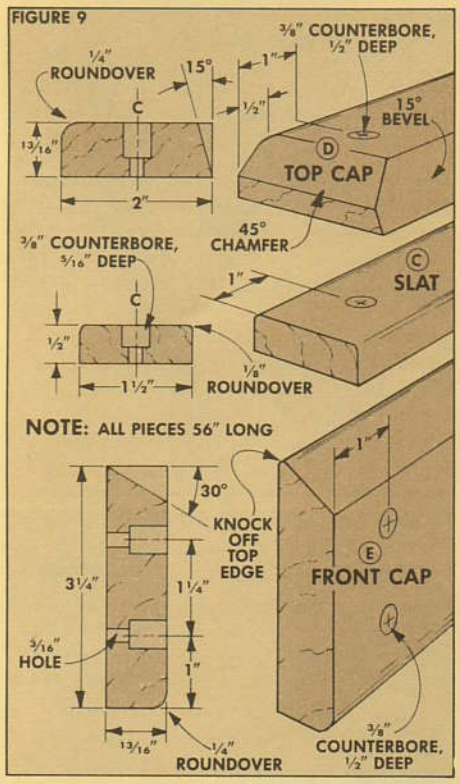

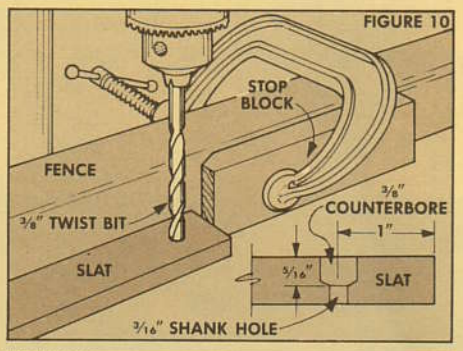

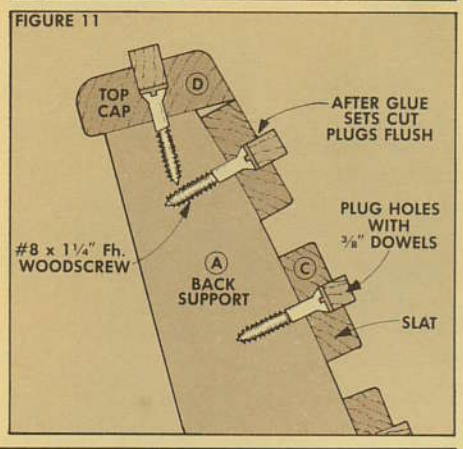

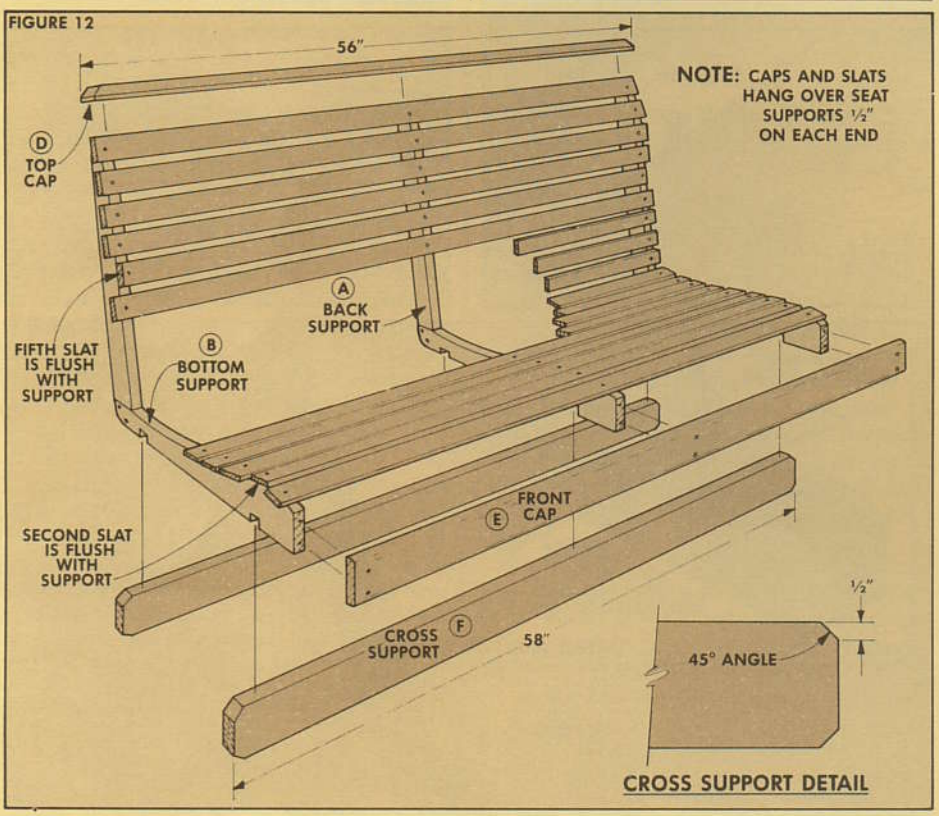

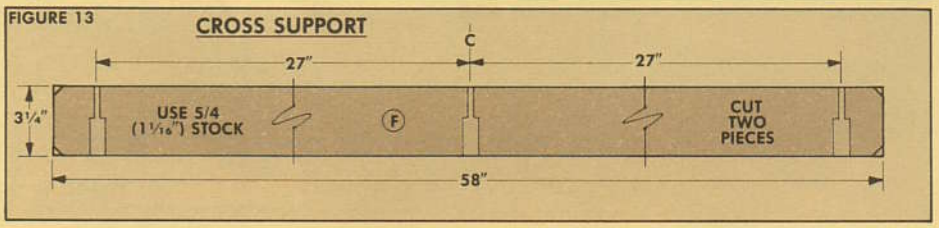

SLATS AND CAPS

After the seat frames are assembled, the 18 slats as well as the top and front caps can be added.

CUT PIECES TO SIZE. To make the slats (C), cut at least 18 pieces of 1/2" stock to a common width of 1 1/2" and to a length of 56". (I cut a couple extra slats so I could choose the 18 best.)

The top and front caps are cut from 4/4 stock (13/16" actual thickness). The top cap (D) is 2" wide and the front cap (E) is 3 1/4" wide. Both are 56" long.

LOCATING THE SCREWHOLES. Now mark the location of the screwholes in these pieces — at both ends (centered 1" from each end) and in the middle (centered on the length), see Fig. 9.

Since the screws will be plugged with 3/8" dowels, drill a 3/8" counterbore followed by a 3/16" shank hole at each location. (Shop Note: To drill all the holes in the same location on each slat, I mounted a fence and stop block on the drill press, see Fig. 10.)

BEVELS AND CHAMFERS. After the holes are drilled, knock off the top edges of all the slats with a 1/8" round-over bit or a chamfer bit.

Then rip a 30° bevel on the top edge of the front cap, and a 15° bevel on the front edge of the top cap, see Fig. 9. Now, rout a 1/4" roundover on the other edge of both caps. Finally, the ends of the top cap are chamfered at 45°, see Fig. 9.

ASSEMBLY. After the slats and caps are shaped, they can be screwed to the three seat frames with No. 8 x 1 1/4" Fh. screws, see Fig. 11.

Before plugging the screwholes, two of the slats (the second one from the front and the fifth one from the top) have to be trimmed short to make room for the arms and arm uprights. I marked them flush with the outside of the seat frames, removed them, and cut on the mark.

After screwing these two short slats back in place, plug all the holes with 3/8" dowels. Then cut off all 63 plugs and chisel them flush with the surface.

CROSS SUPPORT

The completed seat rests on two cross supports (F) cut from 5/4 stock. These pieces are 3 1/4" wide by 58" long, see Fig. 13. After they're cut to size, knock off the four corners with a 45° angle cut, see Detail in Fig. 12.

SCREW LOCATIONS. Now the cross supports (F) can be screwed and glued into the notches previously cut in the seat supports (B). Start by locating the three holes in each cross support, see Fig. 13.

Mark the middle hole first so it's centered on the cross support's length and thickness. Then mark the two end holes so they're centered on the notches in the two outside seat frames.

DRILLING THE HOLES. After making these points, drill ¾"-dia. counterbores, 1¾" deep, followed by ¼"-dia. shank holes the rest of the way through, see Step 1 in Fig. 14. Then hold the cross supports in the notches of the seat frames and mark for 3/16" x 1¼"-deep pilot holes.

Drill these pilot holes and then screw and glue the cross supports to the seat supports with ¼" x 2¾" lag screws, see Step 2. Finally, plug the counterbored holes with ¾" dowels, see Step 3.

THE ARMS

At this point the basic seat is complete. All that's needed are the arms and arm uprights. Both are cut from 5/4 stock.

THE ARMS. The arms (G) are 3¼" wide by 23½" long with a large notch cut out of the back inside corner, see grid pattern in Fig. 15. After cutting out the notch, cut 45° angles off the other three corners. Then use a chamfer bit to put an ⅛" chamfer on the top and bottom edges.

THE UPRIGHTS. The arm uprights (H) are cut 2" wide by 10" long, and a notch is cut out of the bottom inside corner to fit over the slat and seat support, see Fig. 16.

ASSEMBLE ARMS AND UPRIGHTS. After the arms and uprights are cut to shape, drill the counterbore and shank holes at the locations shown in Figs. 15 and 16. Then drill pilot holes in the ends of the uprights and glue and screw the arms to the uprights, see Fig. 17.

ATTACH UPRIGHTS. To attach the arm assembly to the seat, position the uprights directly above the cross supports, and mark and drill ⅛" pilot holes in the side of the seat supports, see Fig. 17. Then screw the uprights in place.

Next, attach the arms to the back supports. First make sure the arms are parallel with the bottom edge of the seat supports, see Fig. 18. Then mark and drill the pilot holes in the side of the back support, and screw the arms in place. Finally, plug the holes with ⅜" dowels and trim flush.

FINISH. Before attaching the chain, I finished the entire swing with three coats of spar varnish, see Sources, pg. 24.

HANGING CHAIN

Now all that's needed is the chain to hang the swing. Attach a 6' length of swingset chain to the end of the back cross support with a lag screw, see Fig. 19.

Then to keep the swing from tipping over backwards, pass the chain through a screw eye in the arm, see Detail in Fig. 18. And finally, fasten the other end to the front cross support.

To hang the porch swing, mount a screw eye to the ceiling. Then use "S" hooks to attach one end of a single chain to the screw eye, and the other end to the middle of the looped chain on the seat. Now relax and swing awhile.

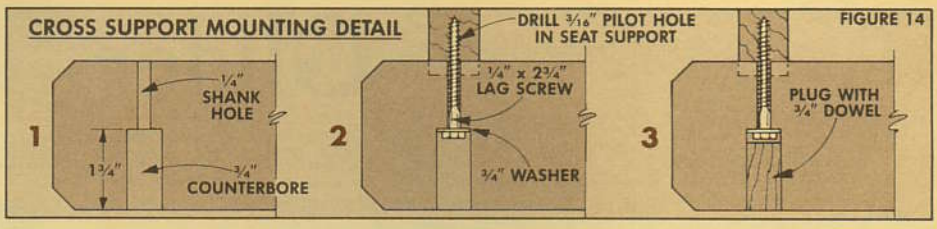

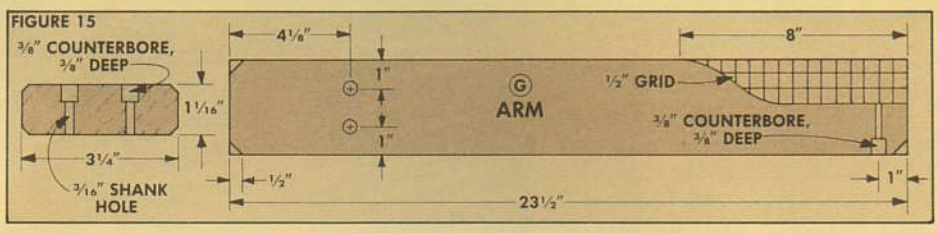

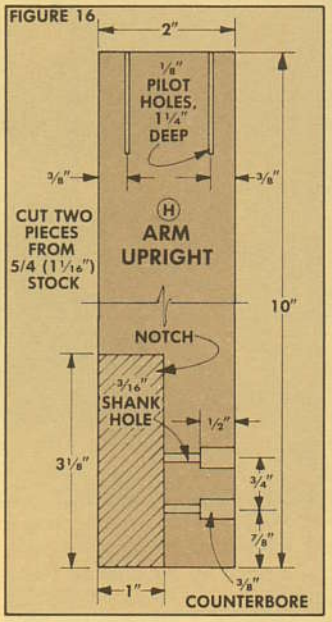

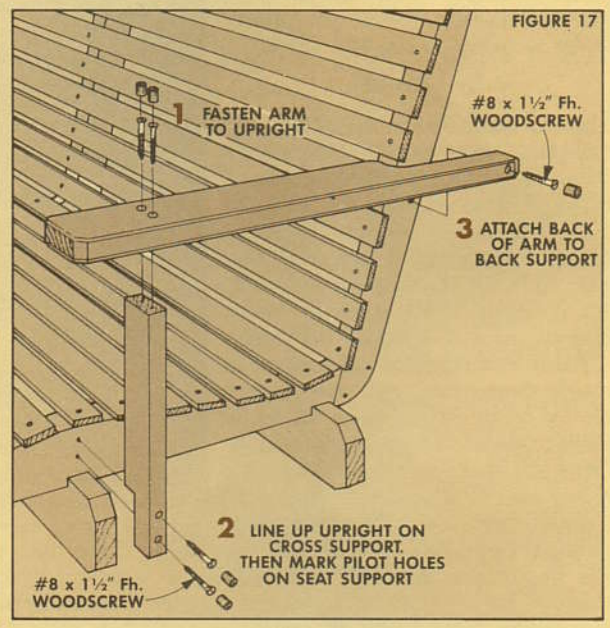

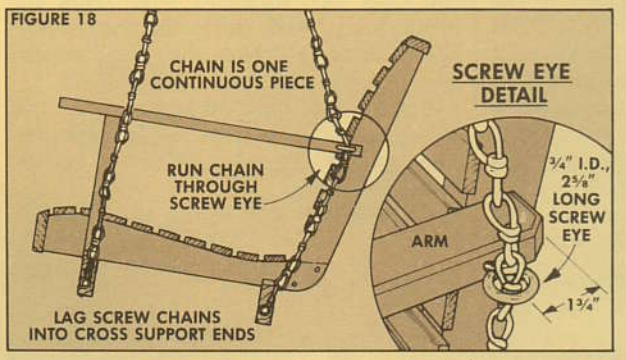

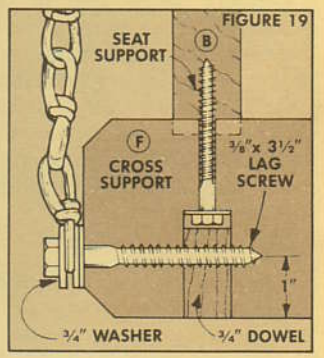

MATERIALS LIST

Overall Dimensions: 26"W x 23¾"H x 58"L

A	Back Supports (3)	1 1/16 x 2¼ - 24
B	Seat Supports (3)	1 1/16 x 3¼ - 24
C	Slats (18)	½ x 1½ - 56
D	Top Cap (1)	13/16 x 2 - 56
E	Front Cap (1)	13/16 x 3¼ - 56
F	Cross Supports (2)	1 1/16 x 3¼ - 58
G	Arms (2)	1 1/16 x 3¼ - 23½
H	Arm Uprights (2)	1 1/16 x 2 - 10

CUTTING DIAGRAM

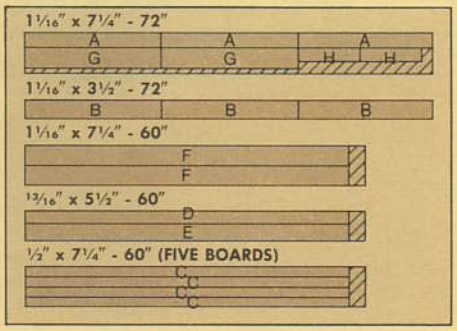

Glider

NO PORCH? NO PROBLEM

It used to be that just about every house in town had a big front porch. No more. And with the demise of the front porch went the logical place to hang a porch swing.

If you don't have a porch, the next best way to enjoy a swing is to make it into a glider. The glider I made has four main parts: two frame-and-panel end units that are held together with two stretchers. I started by working on the end units.

THE RAILS

The end units are built with frame and panel construction. (Tenons on stiles that fit into mortises in rails.) I made the four rails (A and B) first.

Each rail consists of two pieces of 4/4 stock laminated together, see Fig. 1. To get the four rails needed, cut 8 pieces of 4/4 stock to rough dimensions of 3″ wide by 24″ long.

After cutting the rail pieces to rough dimensions, cut two dadoes 2¾″ wide by ¼″ deep in all eight pieces. These dadoes automatically form the mortises when the two halves are glued together, see Fig. 1.

GLUING THE RAILS. However, when gluing the two halves of the rails together, it's important that the dadoes line up exactly. To align them, I made a couple temporary "keys" that fit snugly in the dadoes. (As soon as the glue is spread and the clamps are in place, knock the keys out so they won't be permanently glued in.)

CUTTING TO FINISH DIMENSIONS. When the glue is dry, the rails can be cut to their finished dimensions. First, rip the top rails (A) 2″ wide and the bottom rails (B) 2⅝″ wide, see Fig. 1.

Then to keep the mortises the same distance from the ends of the rails, the rails are cut to final length by measuring from the center out to the ends. To do this on the top rails (A), measure 10¼″ from the center to each end, and on the bottom rails (B) measure 11¼″ from the center to each end, see Fig. 1.

After the rails are cut to final size, trim 45° angles off the bottom corners of the top rails, and the top corners of the bottom rails, see Fig. 1.

GROOVE FOR THE PANEL KEY. To complete the rails, ⅜″-wide by ¼″-deep grooves are routed between the mortises for the floating keys. (These keys are used to hold the panels in the end frames, refer to Fig. 7.)

ADDING THE PADS. To keep the bottom rails out of direct contact with the ground, I added two ⅜″ thick pads, bevelling the inside edge to 45°, see Fig. 2.

CHAMFER EDGES. Finally, rout a ⅛″ chamfer on all edges of the rails and pads — except the top edges of the top rails and the bottom edges of the bottom rails.

THE STILES

To complete the frames, the stiles (C) are cut from 5/4 stock, 3¼″ wide by 22¼″ long, see Fig. 3. Then rout a ⅛″ chamfer on all four edges.

After the stiles are chamfered, cut tenons on each end to match the mortises in the rails. It's important that the shoulder-to-shoulder distance between the tenons is 18¼″. (You have to be pretty exact with all your measurements from this point on or the swing will rub against the glider.)

MORTISE FOR STRETCHERS. With the tenons complete, cut two through mortises in the stiles for the stretchers (F) that are added later. Cut these mortises ½″-wide by 2¾″-long, 4⅝″ up from the shoulders of the tenons, see Fig. 7.

THE PANELS

Now the panels (D) can be made from 4/4 stock to fit the frame. Cut four panels (two per frame) 4¾″ wide by 17¾″ long. Then knock a 45° angle off all four corners of each piece, see Fig. 4.

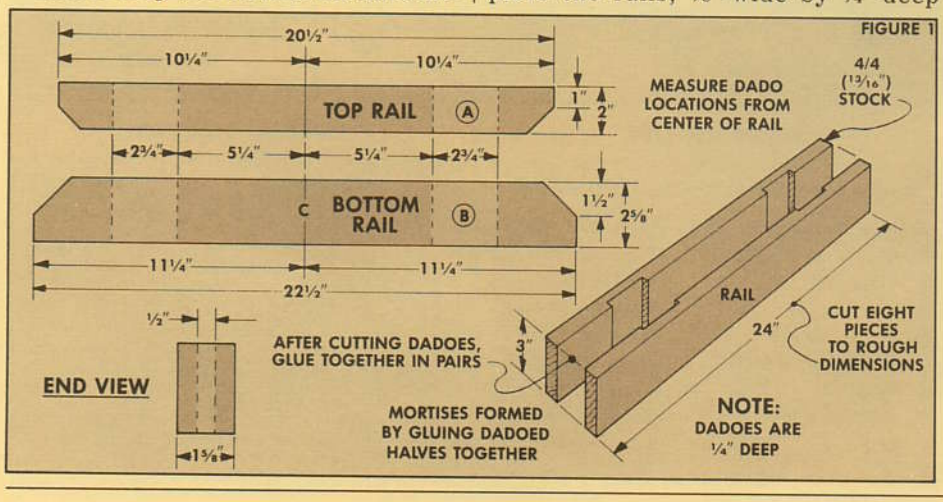

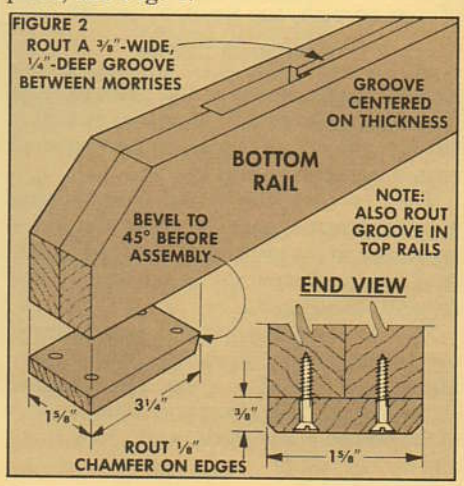

Before edge-gluing the two panels for each frame, I cut out the center "diamond" design. (Make a template by striking two arcs as shown in Fig. 4, and trace the design on the edges of the panels.)

After cutting the diamond shape, rout a ⅛" chamfer all the way around the panels. (Note: Use a sharp chisel to clean up the chamfer where the router bit can't reach.) Finally, edge-glue the panels together.

Now, cut grooves (⅜" wide by ¼" deep) in the ends of the panels to accept the floating key, see Fig. 4. Then cut four keys to fit the grooves in the panels and the top and bottom rails.

THE CAPS

Before assembling the end units, I cut the caps (E) that fit over the top rails. To make the caps, cut two pieces of 4/4 stock 3¼" wide by 21½" long and knock 45° angles off all four corners, see Fig. 5.

Then, rout a ⅛" chamfer on all the edges, and drill ⅜" counterbores and 3/16" shank holes for the screws that fasten the caps to the top rails.

ASSEMBLY

At this point all the pieces for the end units are ready for assembly, see Fig. 7. First, glue the stiles (C) into the mortises in the bottom rail (B). Then glue one of the keys into the groove in the bottom rail.

Now, place the bottom end of the panel (D) on the key (do not glue it) and repeat the process at the top: place a key on top of the panel, and glue the top rail (A) to the key and the stiles. Then clamp this whole end unit together.

When the glue is dry, pin the panel to both the top and bottom keys. Position the panel so there are uniform gaps on both sides. Then, drive brads near the center of the panel into the keys on the inside of each end unit, see Fig. 8. And finally, screw the caps (E) to the top rails with No. 8 x 1½" Fh. screws and plug the holes with ⅜" dowels.

THE STRETCHERS

With the end units complete, I made the stretchers that run between the two units. Cut the two stretchers (F) out of 5/4 stock 3¼" wide by 63⅝" long, see Fig. 6.

Next, cut 1 5/16"-long tenons on each end to fit into the mortises in the stiles of the end units. Before mounting the stretchers, cut two 1" x 1" notches located 14" (in both directions) from the center, see Fig. 6. (These notches are for the runners that will be fastened to the swing later.)

ASSEMBLY. To mount the stretchers to the end units, first dry-clamp the tenons in the mortises and drill two holes for ⅜"-dia. pins, see Fig. 9. Then, glue the tenons in the mortises and drive home ⅜" dowel pins. Finally, cut and chisel the pins flush with the surface.

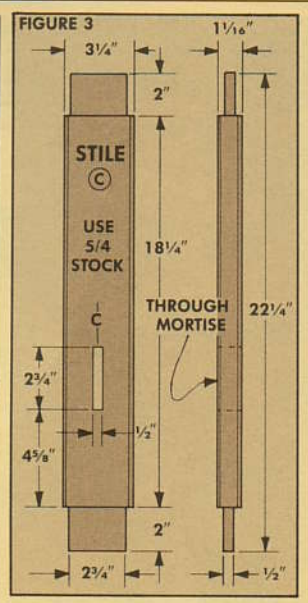

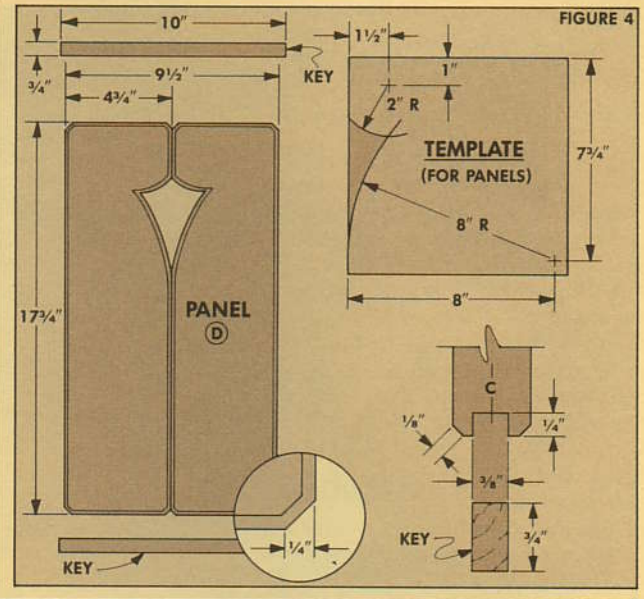

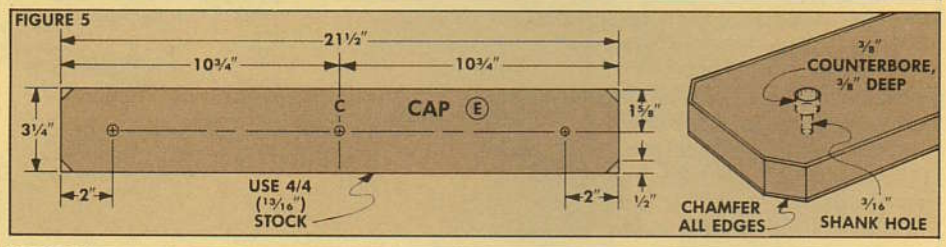

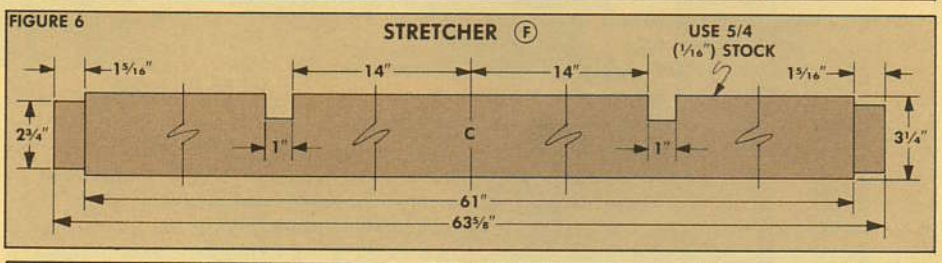

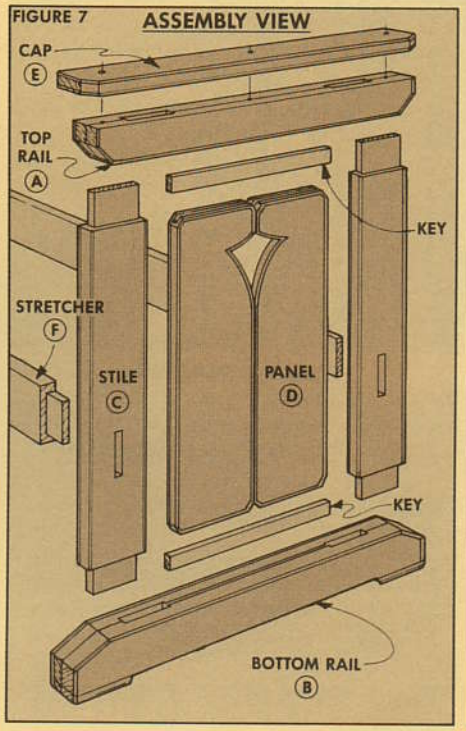

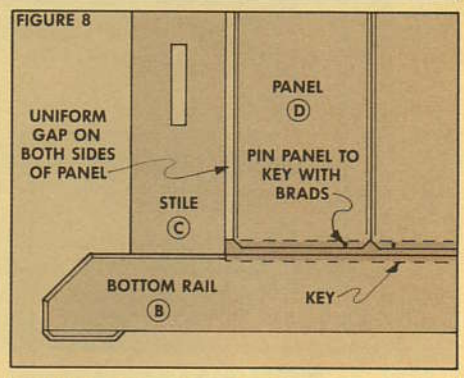

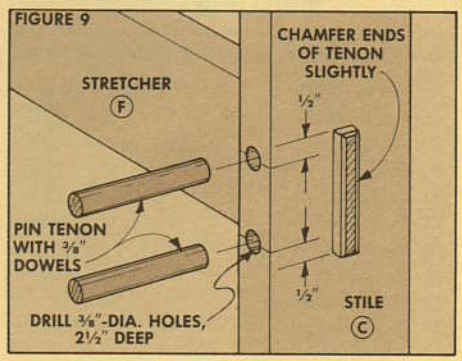

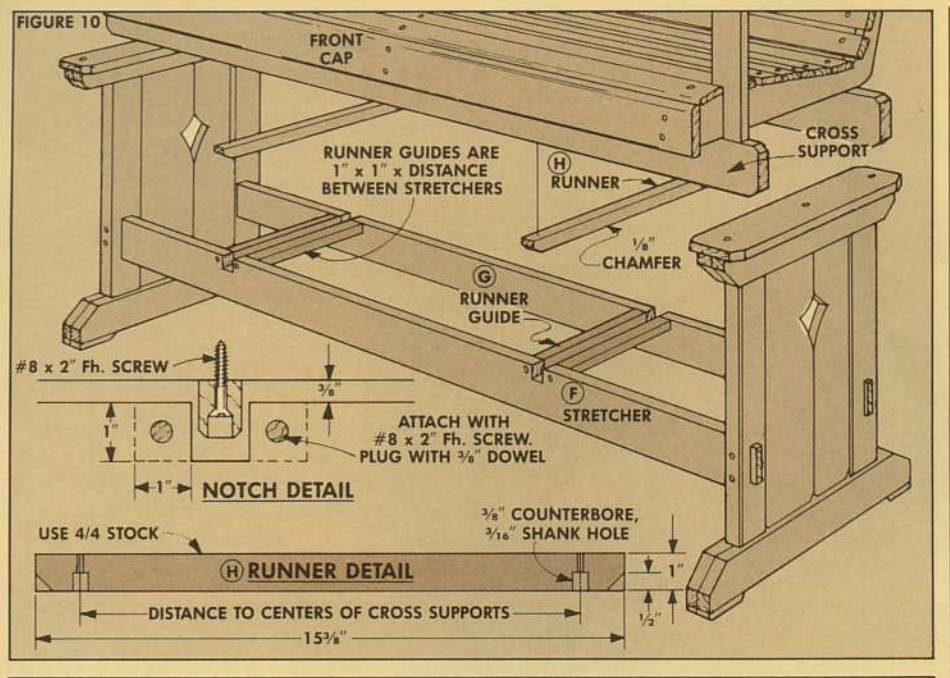

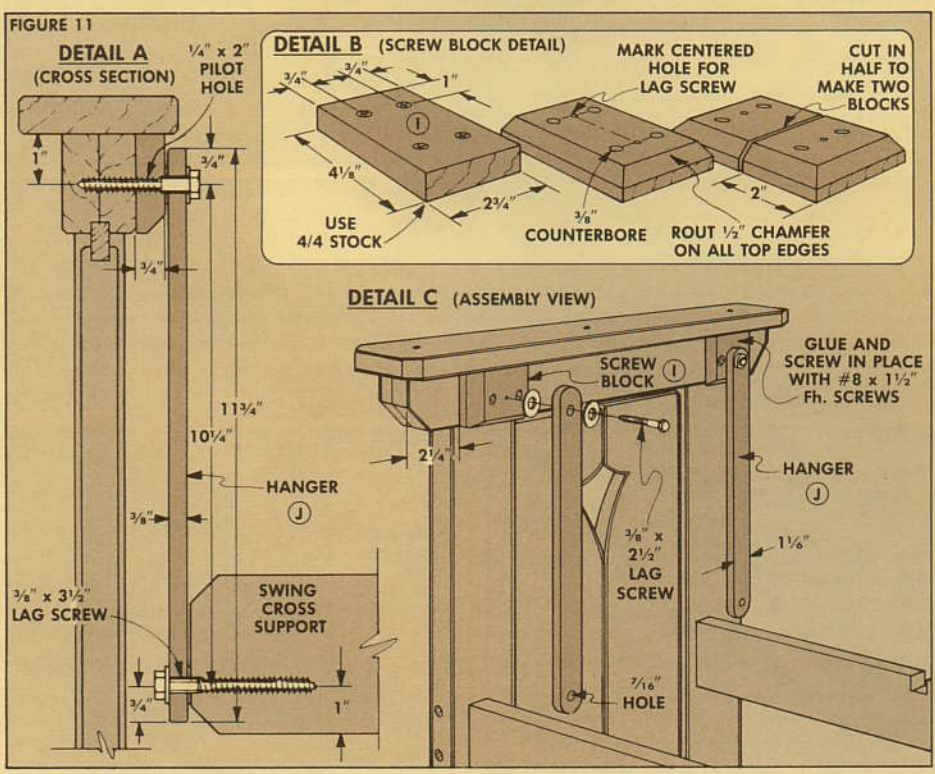

MATERIALS LIST

Overall Dimensions: 22½"W x 24"H x 65¼"L		
A	Top Rails (4)	13/16 x 2 - 20½
B	Bottom Rails (4)	13/16 x 2⅝ - 22½
C	Stiles (4)	1 1/16 x 3¼ - 22¼
D	Panels (4)	13/16 x 4¾ - 17¾
E	Caps (2)	13/16 x 3¼ - 21½
F	Stretchers (2)	1 1/16 x 3¼ - 63⅝
G	Runner Guides (4)	1 x 1 - 12¼
H	Runners (2)	13/16 x 1 - 15⅜
I	Screw Blocks (4)	13/16 x 2¾ - 2
J	Hangers (4)	⅜ x 1 1/16 - 11¾

CUTTING DIAGRAM

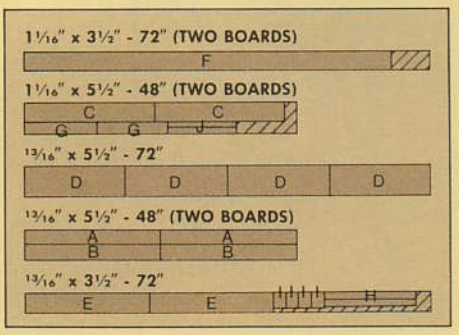

RUNNERS

After the glider stand is assembled, the runners and hanging system can be added.

RUNNER GUIDES. To make the runner guides (G), cut 4 pieces 1" x 1" and long enough to fit between the stretchers (in my case this was 12¼"), see Fig. 10.

Here I should mention one thing: I changed the design *after* completing the glider shown in the photos. I recommend that the runner guides be attached to the stretchers (F) rather than to the swing cross supports as shown in the photos.

To attach the runner guides, locate them alongside each notch in the stretchers by drilling counterbore and shank holes in the stretchers (see Notch Detail in Fig. 10). Then drill pilot holes in the ends of the runner guides and screw them in place.

RUNNERS. With the new design, the runners (H) are screwed to the *bottom* of the swing cross supports. Cut the runners from 4/4 stock (1" x 15⅜") to fit between the guides. Then knock off the bottom corners at a 45° angle, see Detail in Fig. 10.

To locate the screwholes for attaching the runners to the cross supports, measure the distance between the centerlines of the two cross supports. Then transfer this measurement to the runners and drill the counterbores and shank holes.

Next, locate the pilot holes on the cross supports. To do this, set the swing on the glider so it's centered between the end units. Then mark where the notches in the stretcher touch the front cross support on the swing. Lift the swing off and transfer these locations to the back cross support.

Then mark and drill the ⅛" pilot holes for the runners in the cross supports, screw on the runners, and plug all the holes with ⅜" dowels.

HANGERS

The swing hangs (and swings) from four wooden hangers, see Fig. 11. These hangers are mounted to screw blocks at the top of the glider's end units.

SCREW BLOCKS. To make the four screw blocks (I), cut two pieces of 4/4 stock, see Detail B in Fig. 11. Then lay out and drill counterbores and shank holes. Also, mark the hole locations for the lag screws used to mount the hangers.

Next, rout a ½" chamfer on all top edges and cut each of the pieces in half to form the four screw blocks. Then attach the screw blocks under the top caps (Detail C), and drill pilot holes for the lag screws, see Detail A.

HANGERS. The ⅜"-thick hangers are cut 1 1/16" wide and 11¾" long. Round the ends and drill 7/16"-dia. holes, centered ¾" from each end for the lag screws, see Fig. 11.

FINISH. Before attaching the swing to the hangers, I finished the entire glider with three coats of spar varnish.

Tools of the Trade

HAND SCRAPERS

It's a good feeling to accomplish a difficult task with a simple tool. It's an even better feeling when that job is a thankless one (like removing burn marks), but just using the right tool makes it rewarding.

The tool that deserves all this praise is a hand scraper. A scraper is nothing more than a thin piece of tempered steel, about 3″ by 5″ in size. (You might say it's elegant in its simplicity.)

When it's just sitting on the workbench, a scraper doesn't look like it could do much. But I have yet to find another tool that will remove burn marks, mill marks, and scratches with such efficiency.

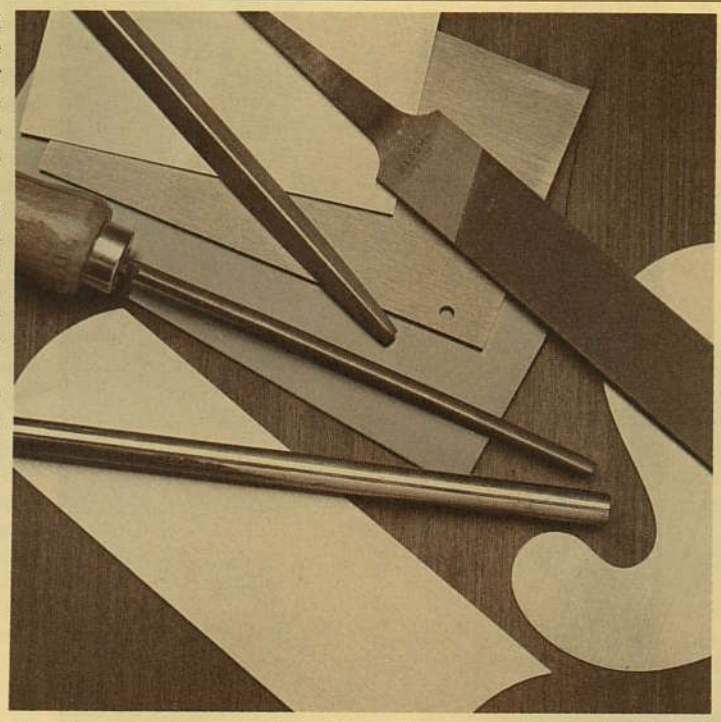

SCRAPER SELECTION

Scrapers come in a limited selection of shapes and sizes. As for shapes, you have your choice between straight edges and curved edges, see photo. As for size, there are two basic sizes: Those made by U.S. companies (Stanley and Disston) are 3″ x 5″, while those made in Europe (Sandvik, Hirsch, Two Cherries) tend to be longer and narrower (a common size is 2½″ x 6″.)

Among these sizes, how do you decide which scraper to buy?

That's a tough question because the difference between the sizes is mostly a matter of how it feels in your hands. And to some extent, this has to do with whether you pull the scraper when you use it or push it.

I like to pull the scraper and for me the wider 3″ by 5″ Stanley or Disston scraper feels comfortable in my hands. If you like to push the scraper, you'll probably prefer the longer narrower European scrapers — this size allows you to flex the scraper around your thumbs (as shown in the photo on page 12).

SHARPENING ACCESSORIES

Beyond the size and shape, the key to this little piece of steel is the edge. A scraper is a useful tool only because of the cutting edge (the burr).

But with respect to the edge, the name scraper is a little misleading. The edge of a scraper doesn't (or shouldn't) really scrape at all. When it's properly sharpened, the edge should *cut* very fine shavings similar to those produced by a plane.

If it does scrape the wood, producing only sawdust instead of shavings, it needs to be sharpened. The technique we use to sharpen is described in the next article. This sharpening technique is relatively simple — it requires only a metal-cutting file, an oil stone, and a burnisher.

MILL FILE. A metal-cutting file is used to joint (square) the unprepared or worn edge of a scraper. I use a Nicholson 10″ smooth cut mill file to sharpen my scrapers, see Sources, pg. 24.

Shop Note: The name "mill" file refers to the original use of this type of file: to sharpen mill or circular saw blades. The term "smooth cut" refers to the spacing of the teeth, which determines the coarseness of cut. You can get bastard, second cut and smooth cut files (listed from coarsest to finest).

HONING STONE. After the mill file is used to square the edge, it has to be honed smooth. To do this, I use a soft Arkansas stone.

Note: Although I like to use Japanese water stones to hone chisels and plane irons, I find them too soft for honing the edge of a scraper. The narrow edge of the scraper can quickly gouge the surface of a water stone.

BURNISHER. After the edge is honed smooth with the stone, a burnisher is used to draw the edge to form the cutting burr.

A burnisher is just a hardened steel rod mounted to a handle. They're made from tool steel (usually a file bank without the teeth) that's tempered so it's harder than the scraper. (Can you use the shaft of a screwdriver instead? Probably not. Most screwdrivers are not hard enough.)

There are three traditional shapes for burnishers — round, triangular, and oval. The choice is pretty much a matter of what shape strikes your fancy. However, I would make one small modification.

The burnishing process requires considerable pressure. For better control, I use an auxiliary handle. This is just a scrap of wood with a hole in it that fits over the other end of the burnisher so I can hold it with two hands, see Fig. 7 on page 13.

One last thing about burnishers. We've had several letters asking about the Ulmia Rapid Wheel burnisher (an L-shaped block of wood with a metal wheel mounted in it.) Does it work? Is it worth the $25 price tag?

Yes, it works. But I have a hard time justifying the cost compared to the $7 "traditional" burnishers that do the same thing (and I think, offer more control).

USING A SCRAPER

Okay, once you've collected these tools and used them to burnish a perfect cutting burr on the edge of a scraper, what do you do with it?

A scraper is basically a finishing tool that's used to clean up the surface of wood, or to fix problems or mistakes.

In addition to removing burn marks, I use it to clean off mill marks (the ripples left by a planer or jointer). It's also excellent for smoothing the surface of a piece of stock that has wild or burl grain (where a plane would just cause tear-out). And I have an old scraper that I use to remove excess glue from joint lines and particularly in corners.

As for how to use a scraper, there are no rules. Just tilt it to whatever angle it takes until you feel it cut, and then pull or push it, depending on what feels best.

That's the beauty of using a scraper. It's a simple tool that gets the job done, and at the same time transmits the feel of the wood right through to your hands.

Sharpening a Scraper

TIPS ON SHARPENING A SCRAPER

The only good thing I can say about a dull scraper is that it doesn't take up much space in the shop. Fortunately, it doesn't take long to sharpen. But there's sort of a trick to it.

Producing a cutting edge on a scraper isn't sharpening in the conventional sense. A scraper is sharpened by *burnishing* the edge to form a burr.

BURNISHING JIG

The key to getting a razor-sharp burr is having a perfectly square, very smooth edge on the scraper to begin with. To get this edge, you need two tools: a metal-cutting file (I use a 10" Nicholson smooth cut mill file), and an oil stone (I use a soft Arkansas stone).

If your coordination approaches that of a diamond cutter, you can hand-hold the file and stone to get an edge that's exactly square to the face. I'm not that steady, so I built a jig that lets me slide the edge of the scraper against the file and stone, rather than vice versa.

FILE HOLDER. The jig is actually two jigs in one. The first part is a groove that holds the mill file when jointing (squaring) the scraper's edge, see Fig. A.

CLAMPING JAW. On the other edge of the jig is a clamping jaw that holds the scraper for burnishing. To make this jaw, counterbore and drill two holes to accept ¼" carriage bolts, see Detail in Fig. B.

CUT THE JAW. After drilling the holes, the jaw can be cut in two passes. Make the first cut with the jig face down on the table saw. Set the distance between the fence and the blade so it's about ½" *less* than the width of the scraper.

Then set the blade height so it cuts a little over half the thickness of the stock. (This will create a slight recess that allows clamping the scraper without crushing the finished edge, see Fig. B.)

After making this cut, stand the jig on edge and saw off the jaw. Then mount the jaw with carriage bolts, see Fig. C.

PREPARING THE EDGE

Now the sharpening process can begin. Start by smoothing off the previous burrs. Rub the edge of a soft Arkansas stone on the face of the scraper until all traces of the old burr are gone, see Fig. 1.

SQUARING THE EDGE. The next step is squaring the edge. Apply a few drops of oil to the file and press it into the groove in the jig, see Fig. 2.

Then hold the scraper flat on the face of the jig and push it toward the tang of the file. (I push with my thumb on the corner of the scraper, using a folded piece of paper as a pad.)

Use just enough pressure to make a smooth shearing cut on the edge of the scraper. Chattering indicates insufficient pressure and results in a rippled edge — and a rough burr.

CURVED SCRAPER. The edge of a curved scraper is squared the same way. It just takes a little practice to keep even pressure on the scraper while sliding it along the file and following the curve, see Fig. 3.

HONE THE EDGE. Filing produces a square but slightly rough edge. To smooth the edge, switch to a soft Arkansas stone. Put a few drops of oil on the stone and butt it up against the side of the jig, see Fig. 4. Hold the edge of the scraper against the stone and slide the scraper back and forth until the edge is smooth.

Shop Note: I slip a scrap of Masonite under one end of the stone to raise it at an angle. Then every couple of strokes, I push the Masonite farther under to raise the stone ever-so-slightly. This reduces the risk of grooving the stone.

POLISH THE FACE SIDE. This honing process will produce a slight burr or wire edge on the edge of the scraper, which is removed by lightly polishing the face of the scraper again with the stone, see Fig. 5.

BURNISHING THE EDGE

Once the edge is square and smooth, it can be burnished to produce the cutting burr. The burnishing process involves two steps: drawing the edge, and forming the burr.

FIGURE A

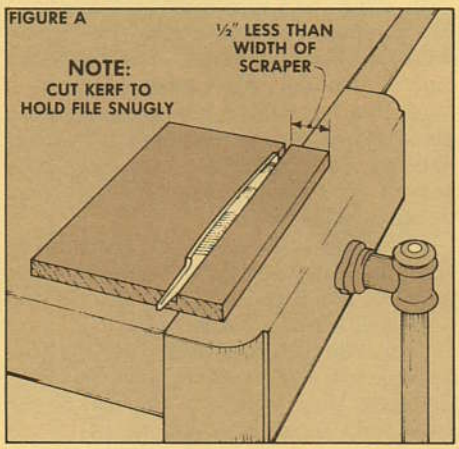

FIGURE B

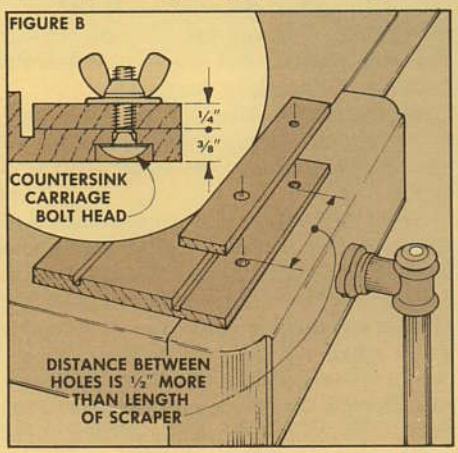

FIGURE C

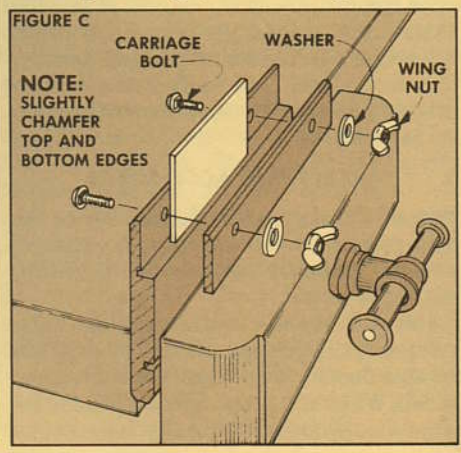

DRAW THE EDGE. To draw the edge, lay the scraper flat on the jig, and hold the burnisher flat on the face of the scraper, see Fig. 6. (Put a drop of oil on the edge of the scraper to reduce friction.)

Bear down hard with your thumb, and take two or three strokes along the edge. This will draw the edge to produce the profile shown in the Detail in Fig. 6.

ROLL THE BURR. Now the edge can be burnished to a cutting burr. To prevent flex, clamp the scraper in the jig so no more than ½" of the face is exposed.

BURNISH THE EDGE. Hold the burnisher at a slight (5° to 10°) angle, and bear down as you pull the burnisher along the edge to roll the burr, see Fig. 7. The object is to roll a uniform burr along the edge from one corner of the scraper to the other.

FEEL FOR THE BURR. After two or three strokes, check for the burr. Pull the pad of your finger up (perpendicular to) the edge. Feel along the entire edge of the scraper to see if the burr is even. If it's not, take a few more strokes.

CURVED SCRAPER. Forming the burr on a curved scraper is a little more difficult. Mount the scraper so just ½" of the face is above the jig. Then burnish the edge as far as you can. Reposition the scraper to pick up where the last strokes left off.

Try to maintain a uniform angle and pressure so the burr will remain the same around the perimeter of the curve.

USING THE SCRAPER

When you've rolled an even burr on the edge of the scraper, take it out of the jig and make a cut on a piece of hardwood. Play around with the angle until you feel it *cut* the wood, not just slide over it. When it raises a pile of very fine shavings (not just dust), you know it's sharp.

The burr on the scraper edge wears out pretty quickly. When the scraper raises both shavings and dust, it's getting dull. When it raises nothing but dust, it is dull.

It's tempting to just reburnish the edge. But I don't. I take five minutes to repeat the entire sharpening procedure. Then go back to producing a glass-smooth finish.

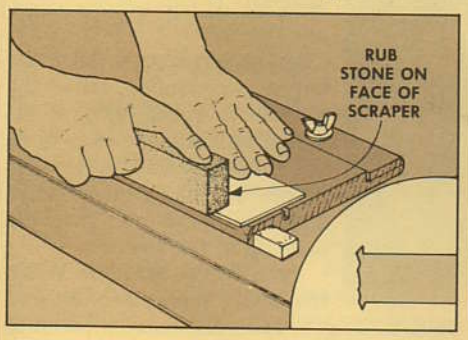

1 *Smooth off the previous burr by honing the face of the scraper with a soft Arkansas stone. Inset: Exaggerated view of unprepared or worn scraper edge.*

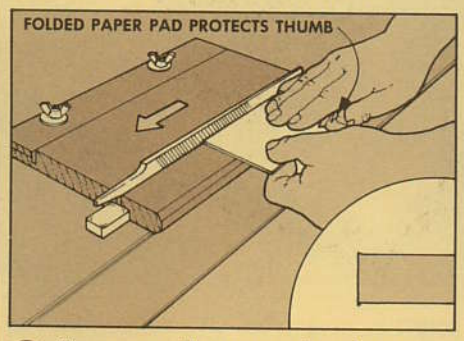

2 *To square the scraper's edge, press scraper firmly against the file and push it toward the tang of the file. Inset: Edge is square but slightly rough.*

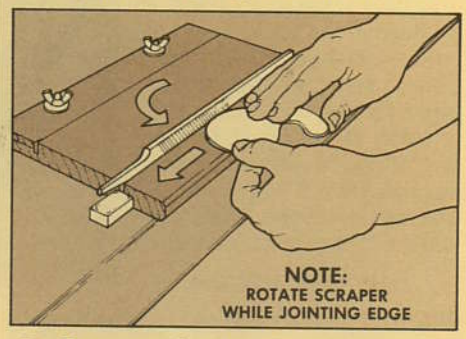

3 *To square the edge of a curved scraper, rotate the scraper while pushing it forward. It takes a little practice to do this and still maintain the original curve.*

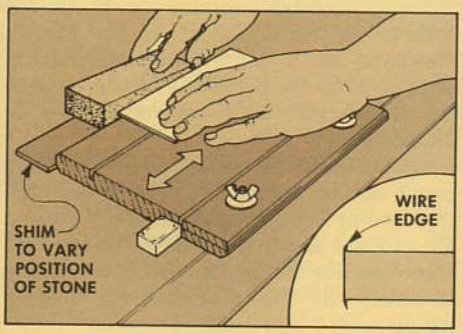

4 *Smooth the edge left after filing by honing the scraper's edge against the edge of the Arkansas stone. Inset: Wire edge raised during honing process.*

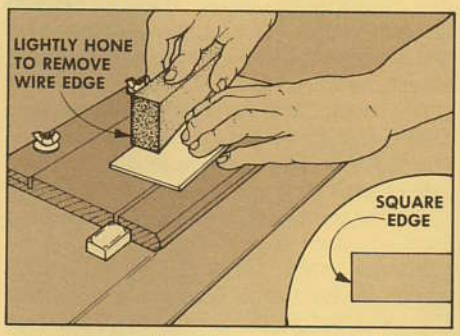

5 *Remove the wire edge by rubbing the edge of the stone flat on the face of the scraper. Inset: After honing the face, the edge should be smooth and square.*

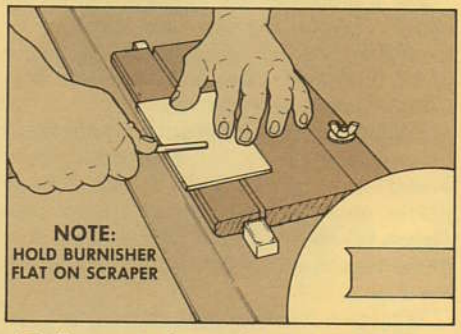

6 *To create the cutting burr, first draw the edge (see inset) by placing the burnisher almost flat on the face of the scraper and stroking from end to end.*

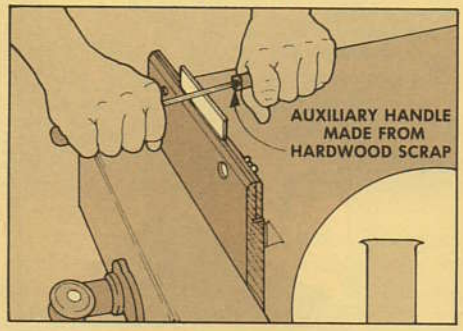

7 *Clamp scraper in the jig, and press down on burnisher to form the hooked cutting burr, see inset. Use pad of finger to feel for an even burr along entire edge.*

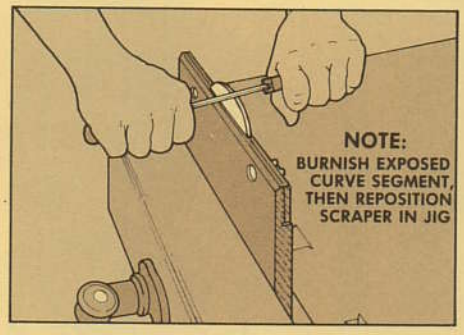

8 *Form the burr on the edge of the curved scraper as was done on the straight scraper. Progessively reposition the scraper to maintain a uniform burr.*

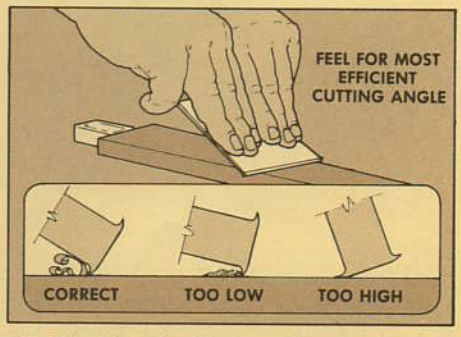

9 *Finding the best cutting angle is a matter of feel. Hold the scraper at an angle and pull (or push) it until it produces fine shavings (not dust).*

Serving Tray

READY TO GO

When this project started, the idea was to build a complete "breakfast in bed" serving tray (which is shown on page 18). But as we were working on the design, I thought it would be nice if the actual tray part could be lifted out of the carrier frame.

It turned out that the tray was kind of handy by itself, so I decided to build a couple more (without the carrier frame) and try different versions for the tray's bottom.

Note: If you want to build the whole "breakfast in bed" serving tray, it's best to build the carrier frame first. Then build the tray to fit the frame.

THE TRAY BOTTOM

Whether you're building the tray by itself or to fit in the carrier frame, start with the bottom panel. The easiest approach here is to use ¼" hardwood plywood — cutting it to a rough size of 13¼" x 17½".

For a more durable surface, I tried another version for the tray bottom by mounting Formica on both sides of a piece of ¼" Masonite. (You need to cover *both* sides to prevent warping.)

I also made a version with a solid-wood bottom panel. To do this, I ripped 4/4 stock into 2" wide pieces. Then I turned these pieces on edge and resawed them into strips ¼" thick. These strips are edge-glued together to form the bottom panel, see Fig. 1.

Whatever version you choose, cut the panel to rough size. (It's cut to final size after the frame is cut.)

THE MITERED FRAME

After the panel is cut to rough size, the four pieces for the frame (B and C) can also be cut to rough size. Cut these pieces out of 4/4 stock so they're 1" wide and to rough length, see Fig. 1.

GROOVES. Then cut a 5/16"-deep groove in each frame piece wide enough to hold the tray bottom. This groove is cut on the 1" side of each strip (see Detail in Fig. 1) and should be positioned to leave a ¼" shoulder on the bottom edge.

ROUND OVER EDGES. Next, the inside edges of the frame pieces are rounded. However, before doing this, mark the centerline on the top edge of the frame's side pieces (C). (The centerline is needed later to position the holes for the handle.)

Now, round over the *inside* edges of the four frame pieces. I did this on the router table using a ⅜" round-over bit on the top edge and a ⅛"-round-over bit on the bottom edge, see Fig. 2.

MITER TO LENGTH. After the edges are rounded, miter the pieces to final length. (If you're building the tray to fit the carrier frame, miter the pieces so the point-to-point length is ⅛" shorter than the opening in the frame.)

TRIM PANEL TO SIZE. When the frame pieces are mitered to final length, trim the bottom panel to final size to fit between the bottoms of the grooves in the frame. The amount of clearance needed here depends on the type of material used for the bottom panel.

For plywood or Formica panels, allow a total of 1/16" for a glue relief, see Fig. 3. However, for the solid-wood panel, allow a total of ⅛" so the panel has a little room to expand/contract with seasonal changes in humidity.

ASSEMBLY. Now the frame and bottom panel can be assembled. For trays with plywood or Formica panels, apply glue to the grooves and to the mitered ends of the frame pieces, and use a band (web) clamp to clamp the frame around the bottom panel.

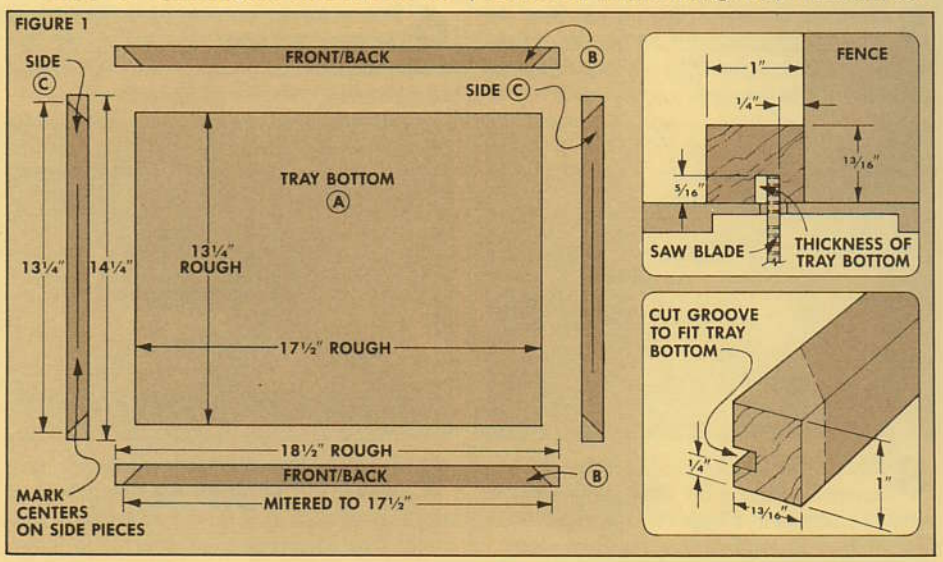

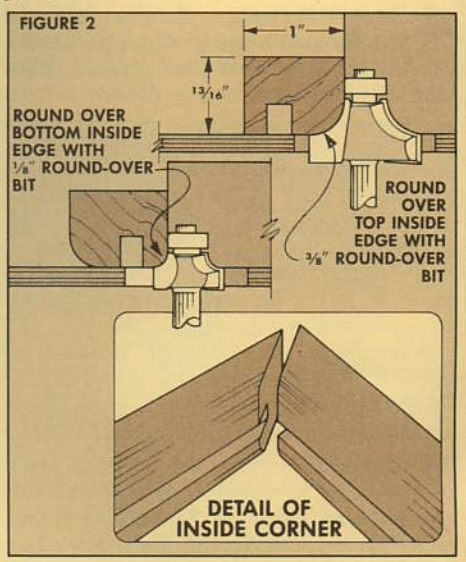

If you're using a solid-wood panel, apply glue to the mitered ends only, not in the grooves. (The panel should be free to expand/contract in the frame.) Then clamp the frame around the panel with a band clamp.

SPLINE. To strengthen the miter joints, I added a spline. Clamp the tray in a holding jig, see Fig. 4. (This jig is described in more detail in *Woodsmith* No. 36.) Make one pass on each corner, making certain the cut doesn't extend into the panel groove. Then cut a spline to fit the kerf.

Glue the spline in place and when the glue is dry, trim off the "ears" of the spline, and sand it flush with the frame.

ROUND EDGES. Finally, the outside edges of the frame can be rounded, the same way as the inside edges, see Fig. 7.

THE HANDLES

To complete the tray, handles are added. I have to admit that there are easier ways to make handles than the way shown here. But this is one of those extra-time details that I kind of enjoy doing.

THE HANDLES. To make the handles, start by cutting a strip 1" wide by 6¼" long, see Fig. 5. (You could use a little piece of exotic wood.) Turn this piece on edge and resaw two strips ¼" thick to form the handles.

HOLES IN HANDLES. After the handles are cut to size, drill ¼"-dia. holes centered on the width and ⅝" from each end. Then round over the top edge of the handle with a ⅛" round-over bit.

HOLES IN FRAME. Center the handle on the width of the frame (see Fig. 6), and using the handle as a template, mark the position of the holes on the centerline (that was marked earlier).

THE DOWELS. Now the handles can be mounted to the frame with ¼" dowels, 2½" long. (I made my own dowels, see page 16.) To ensure a good tight fit (and to add a little decoration), I cut kerfs in the top and bottom ends of the dowels and tapped in wedges. To cut the kerfs, hold the dowels in the simple jig shown in Fig. 9.

THE WEDGES. The wedges are made by ripping a strip ¼" wide (to match the diameter of the dowel) and to a thickness to match the kerf, see Fig. 8. After the strips are cut, trim off ¾"-long pieces and sand the ends to a wedge shape.

ASSEMBLY. Now, glue the bottom end of the dowels into the holes in the tray frame, and glue the handle over the top end of the dowels, see Fig. 10.

Then use a toothpick to put a little glue in the kerf, and push the wedge in place. When the wedge bottoms out, let the glue dry and then cut it off and sand it flush with the surface, see Fig. 10.

FINISHING. When the handles were complete, I sanded the tray frame smooth and applied two coats of tung oil varnish.

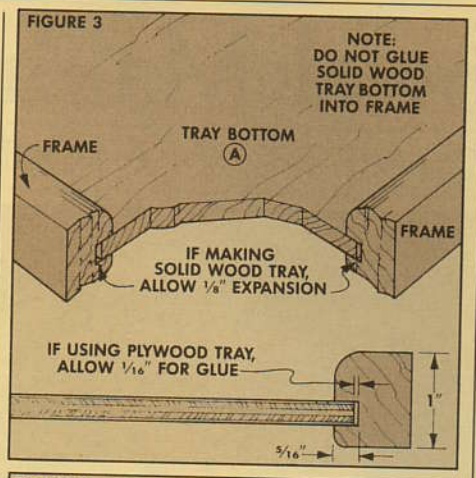

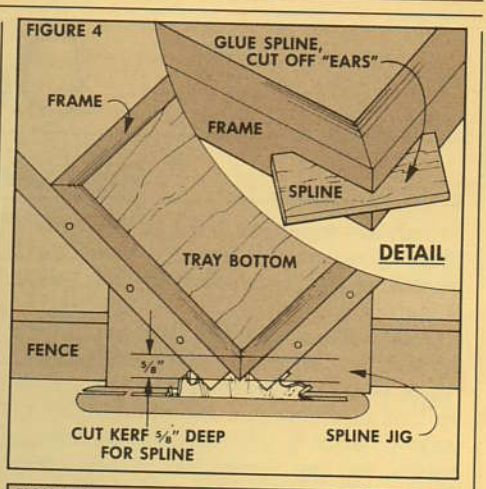

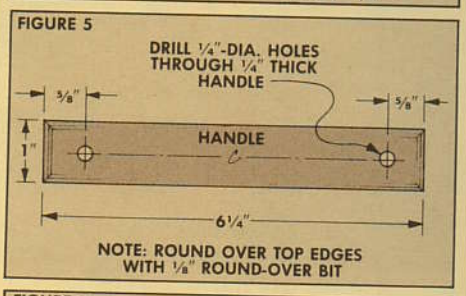

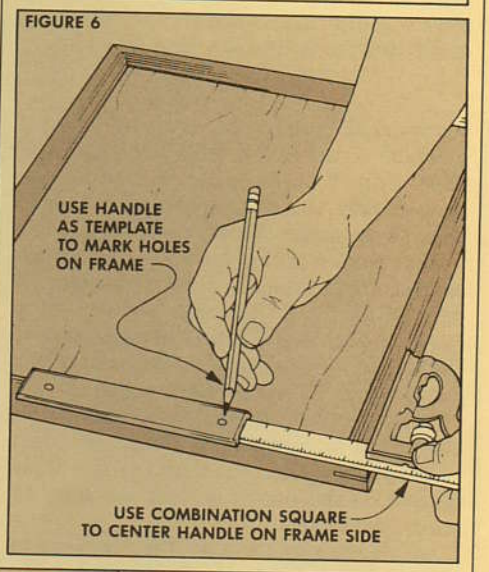

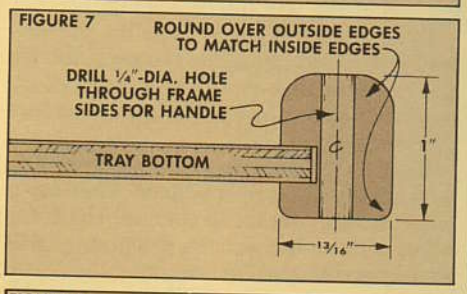

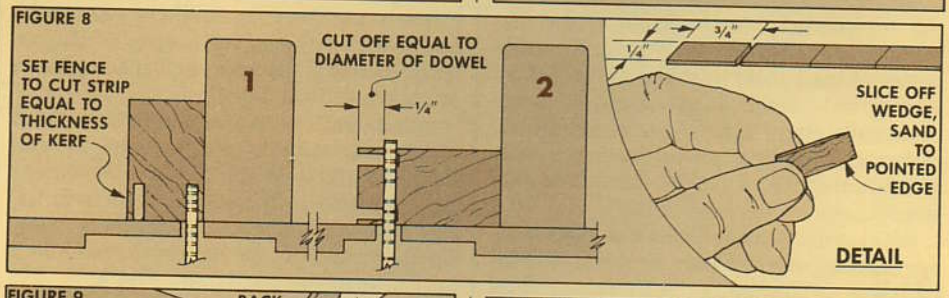

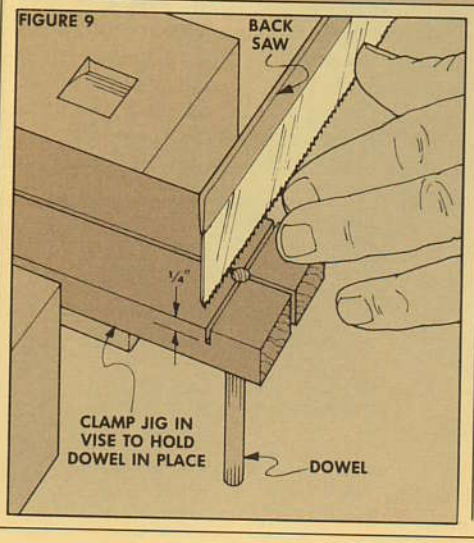

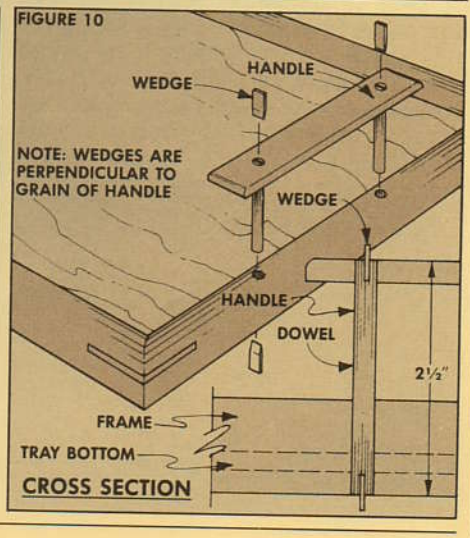

Dowel Making

JUST A SQUARE PEG IN A ROUND HOLE

I've always wondered if there were a way to custom-make dowels — any size I wanted, out of any wood I wanted. There is.

Back in *Woodsmith* No. 19 we featured a jig that can be mounted to a router to "turn" your own dowels. I decided to modify that jig for use on the router table to make a small production run of dowels needed for the "breakfast in bed" tray shown in the next article. The nice part about this jig is that it's easy to make.

MAKE THE JIG

I started by ripping a 4"-wide by 10"-long piece of scrap maple into two pieces 2" wide. One of these pieces is used for the support arm, the other is drilled and cut to form three guide blocks, see Fig. 1.

SPLINES. Before making the guide blocks, I cut grooves down the edges of both pieces for ⅛" Masonite splines. Then later, when all these pieces are assembled, the splines will guarantee alignment of the guide blocks to the support arm.

THE GUIDE BLOCKS. Now the guide blocks can be made by drilling infeed and outfeed holes. The diameters of the holes depend on the size of dowels you want to make, see chart.

DETERMINE HOLE SIZE. The diameter of the outfeed holes is the same as the diameter of the dowel, see Fig. 2. The diameter of the infeed hole is determined by adding 1/16" to the dowel size you want. Then multiply by 1.4. (If you're into math, technically you multiply by the square root of 2.) To make a ¼" dowel, the infeed hole should have a diameter of 7/16".

DRILL THE HOLES. Once the hole sizes are determined, the only problem is drilling them so they're perfectly centered on each other, from block to block, see Fig. 5.

I did this by first drilling a 7/16" infeed hole to a depth of 2" in the end of the workpiece for the guide blocks. Then I cut off the infeed block a little short of 2" long. This left the point of the hole in the remaining end of the workpiece, see Fig. 3.

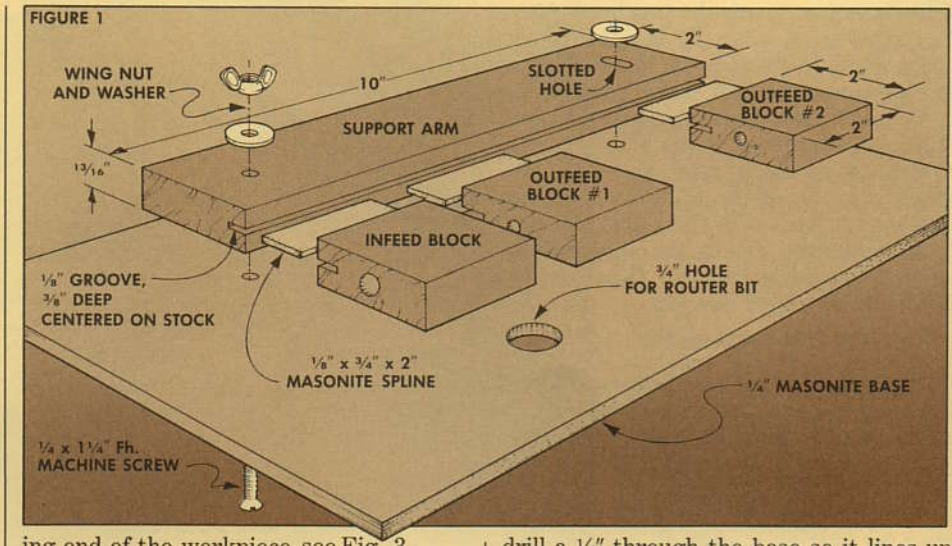

Next, I aligned the ¼" hole for the outfeed guide block by using the point left by the 7/16" hole, and drilled to a depth of 2". Again cut off this block, leaving the bottom part of the hole.

Repeat this process to get another outfeed guide block with a ¼" hole. Then use a large countersink bit to chamfer the front edges of these holes so the dowel stock will feed in easily, see Fig. 6.

ASSEMBLY. Now the guide blocks can be glued to the support arm, using ⅛" Masonite splines to align them, and spacing them as shown in Fig. 5.

THE BASE. The assembled jig is secured to a ¼" Masonite base. To mount it, hold the jig on the base and drill a ¼" hole near the front end so it goes through both the jig's support arm and the Masonite base. Then countersink the hole in the base for a ¼" Fh. machine screw, see Fig. 4.

SLOTTED HOLE. You have to pivot the jig in order to make fine adjustments when setting up the cuts. So, drill a series of 5/16" holes to form a 1"-long slot near the back end of the jig's support arm, see Fig. 5.

Then position the jig on the base and drill a ¼" through the base so it lines up with the slotted hole in the arm. Again, countersink the hole in the base for a ¼" Fh. machine screw.

HOLE FOR BIT. Finally, drill a ¾"-dia. hole in the base between the infeed and outfeed guide blocks, see Fig. 5. (This is where the router bit on the router table will come through.) Now clamp the jig to the router table and mount a ½" carbide-tipped straight bit in the router.

CUT THE DOWEL STOCK

The jig is ready to be aligned. All it needs is the dowel stock. The dowels are turned from square stock that's cut to size so the corners contact the circumference of the infeed hole, see Fig. 2.

Shop Note: I tried making dowels out of oak, ash, cherry, maple, red gum, and mahogany. All these woods work as long as the stock has *straight* grain. Wavy grain causes chip out just like on a jointer.

CUT STOCK TO SIZE. The dimension of the square stock was actually determined earlier to get the diameter of the infeed hole—just add 1/16" to the diameter of the dowel you want. For ¼" dowels, this means stock

FINISHED DOWEL (A)	STOCK (B)	INFEED HOLE (C)	OUTFEED HOLE (D)
⅛"	3/16"	¼"	⅛"
3/16"	¼"	⅜"	3/16"
¼"	5/16"	7/16"	¼"
5/16"	⅜"	½"	5/16"
⅜"	7/16"	⅝"	⅜"
*7/16"	½"	11/16"	7/16"
*½"	9/16"	13/16"	½"

*FOR LARGER HOLES, MAKE JIG FROM STOCK AT LEAST 1½" THICK

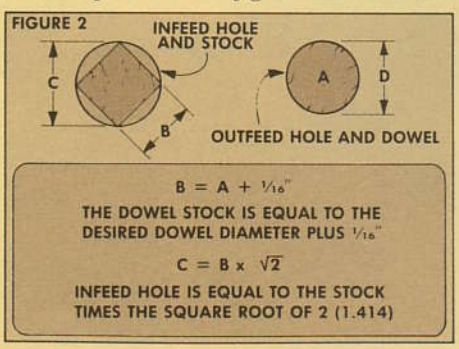

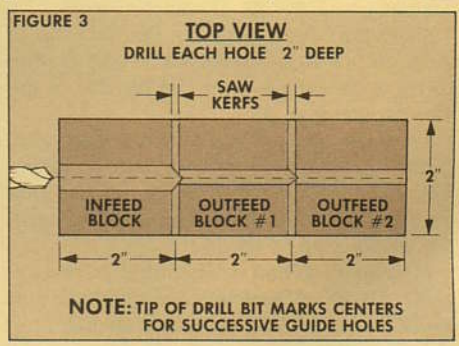

that's 5/16" square, see chart.

Shop Note: Ripping stock this thin can be dangerous. I used a special push jig, see Talking Shop, pg. 23.

TRIAL CUT. After determining the size of the dowel stock cut a trial piece and push it into the infeed hole. It should fit tight on all four corners. (It's better to be a little too tight than too loose.)

TURNING THE DOWELS

Before actually running the dowel stock through the jig, the jig has to be set up. For the initial positioning, sight through the holes in the guide blocks, and move the entire jig until the edge of the hole in the outfeed block lines up with the edge of the router bit, see Fig. 6. Then clamp the jig to the router table.

FORM A SHANK. Before making the final adjustments, form a shank on the end of the dowel stock to fit in the chuck of an electric drill. To do this, turn on the router and feed the stock through the input hole with a twisting motion, Fig. 7.

If the dowel stock fits too tight in the infeed hole and you can't twist it, sand the corners a little. All you want to do at this point is rough turn about 3/4" at the end of the stock, see Fig. 8.

FINE TUNING. Chuck the newly-formed shank in the drill, and position the other end in the infeed hole. Then turn on the router and the drill and feed the stock slowly past the bit, see Fig. 9.

As the stock moves past the bit, it will be "turned" into a round dowel. However, it may not be the right size. If the dowel is oversize, it will bind in the hole in the outfeed block. If the dowel is undersize, it will vibrate as it goes past the bit and have spiral chatter marks.

To make final adjustments, turn off the router, loosen the wing nut at the slotted hole, and pivot the jig. Then make another trial cut to see if the dowel fits snugly in the outfeed hole.

You'll be able to feel when the setting is right. The dowel will slide right into the outfeed hole with no chatter or binding. Feed the stock as far as it will go. (If you're making long dowels, it helps to have a friend hold the dowel steady as it comes out of the second outfeed block.) Then turn off the router before withdrawing the newly-formed dowel.

To complete the unturned section at the drill end, just reverse the dowel in the drill, and push it in the jig. However, as the last of the unturned square emerges from the infeed hole, the dowel will lose the support of the hole and might start chattering. To prevent this, lightly bend the dowel away from the bit and turn off the router before pulling it out.

The completed dowel may be a little rippled. To smooth it, just chuck it in a drill to sand it smooth, see Fig. 10.

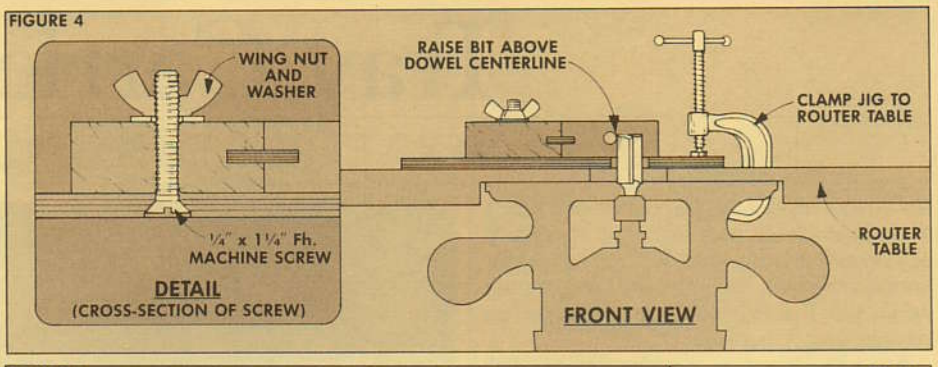

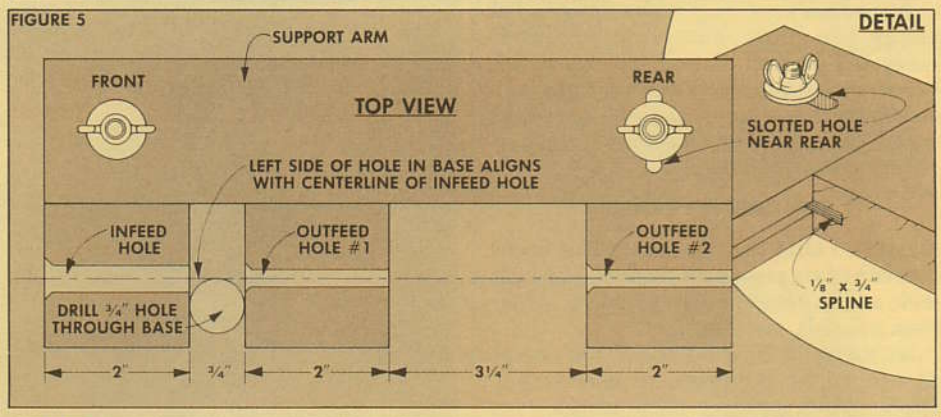

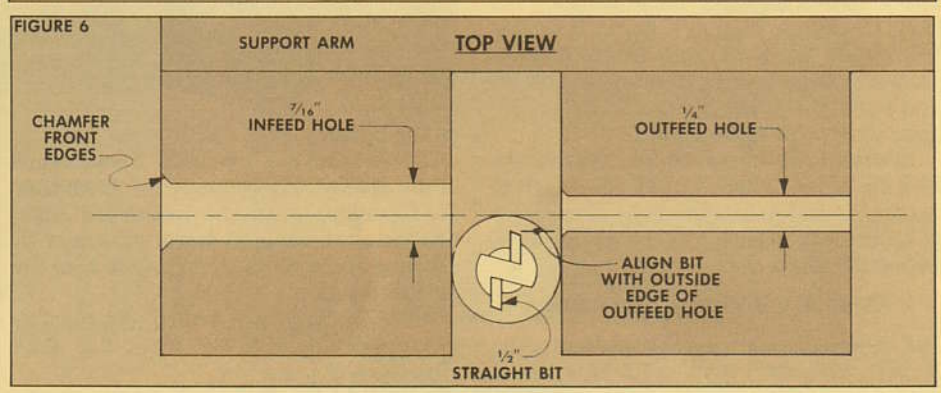

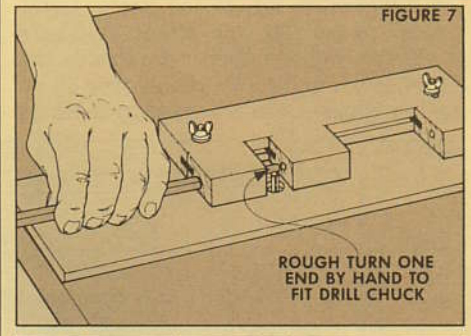

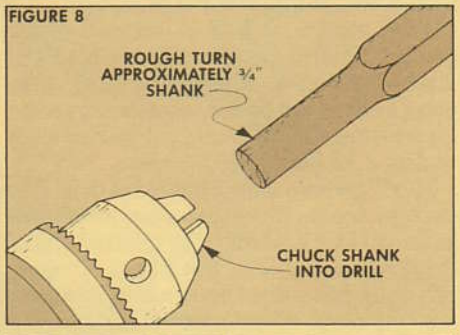

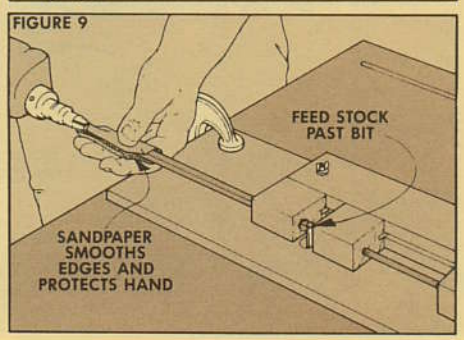

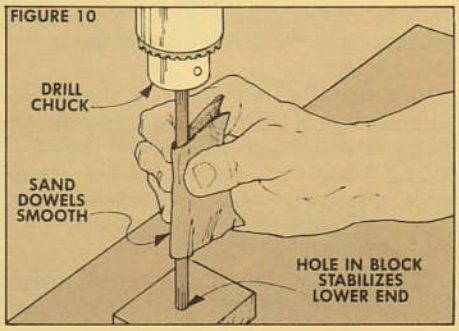

Tray Carrier

POCKET THE DIFFERENCE

As I was building this tray/carrier, I thought it would only be used on special days (anniversaries and Mother's Day) for breakfast in bed. But since it's been around for awhile, I've found the two "pouches" on the sides very handy.

An ordinary tray is good for carrying flat things, like dishes. But when you have to carry tall glasses of iced tea out to the porch, or mint julips to the veranda, or a couple bottles of beer, some chips, and the sports page out to the back yard, this carrier tray comes in handy.

THE CARRIER FRAME

To start, I built the top frame. This frame consists of six pieces cut from 4/4 stock, 1" wide and to rough length (about 1" longer than needed), see Fig. 1.

MITER ENDS. Now miter the four pieces (A and B) for the frame to final length. (Note: When mitering these pieces, turn them on edge so they're 1" high.) Miter the front/back pieces (A) to a length of 27⅝" from long point to long point of the miters, and miter the sides (B) to a length of 15" from long point to long point.

DIVIDERS. To complete the frame, the two dividers (C) are cut to final length to match the inside length of the side pieces (B). (The inside length is the distance between the *heels* of the miters.)

ASSEMBLE DIVIDERS TO FRAME

Before assembling the mitered frame, the dividers are joined to the front/back pieces with dowel joints, see Fig. 4.

First, drill a ¼" hole on the end of the divider. To drill this hole, I mounted the divider in a vise, and located the center point by drawing lines connecting opposite corners, see Fig. 2. Then I used a Portalign to drill a ¼"-dia. hole, ⅜" deep.

Next, corresponding holes are drilled in the tray frame. These holes are positioned so the divider is 5" from the mitered end of the front/back pieces, see Fig. 4. To position these holes, first mark a line 5" in from the long point of the mitered ends on the front/back pieces, see Fig. 3. Then extend this line down the inside edge of the front/back pieces.

Now mount a dowel center in the hole in the end of the divider. Place a try square on the marked line (see Fig. 3) and slide the divider along the square until the dowel center marks the position of the hole on the front/back piece. Then drill this ¼"-dia. hole ⅜" deep.

TRAY SUPPORT DOWELS. Next the holes for the tray support dowels (D) are drilled on the inside edge of the dividers, see Fig. 4. These holes are located 2" from the end of the divider, and centered ⅝" down from the top edge. (Since the divider is 1" high, this puts the support dowel off-center — allowing more room at the top to hold the tray in position.)

After the holes are drilled, cut the four ¼" support dowels 1½" long, but don't glue them in place yet.

ROUND EDGES. Before the carrier frame can be assembled, the edges of all six pieces are rounded over. I did this on the router table, using a ⅜" round-over bit on the top edges and a ⅛" round-over bit on the bottom edges, see Fig. 5.

ROUND ENDS OF DIVIDERS. Since the inside edges of the tray frame are rounded, there's an awkward transition between the ends of the dividers and the rounded edges of the front/back pieces. To smooth this transition, I rounded the ends of the dividers.

Trying to round the ends of such small pieces is a tricky operation. The technique I used to do this was to clamp the dividers together along with a piece of scrap, see Fig. 6. This assembly is then wide enough to safely rout the ends on the router table. With the pieces clamped together, rout the

FIGURE 1

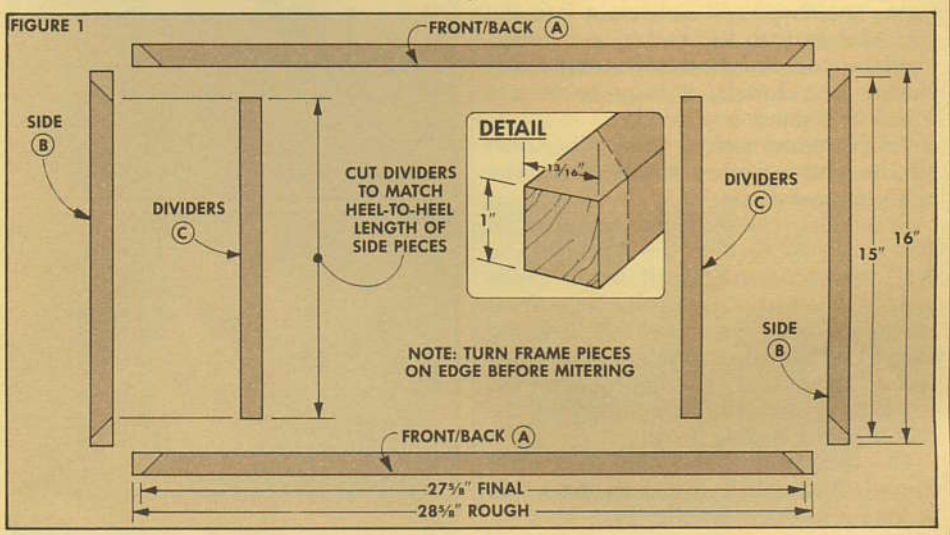

ends with a ⅜" round-over bit.

Shop Note: Although the round-over bit has a pilot to guide the pieces, I found it was best to use the fence on the router table. Set the height of the bit and then align the edge of the fence with the edge of the pilot.

ASSEMBLE THE TRAY

Finally, the frame is ready to be assembled. Glue the dividers between the front/back pieces, and apply glue to all the mitered ends. Then clamp the frame together with a band clamp, and clamp the dividers in place with bar clamps.

SPLINES. To strengthen the mitered joints, I added splines. Place the frame in a holding jig (as shown in Fig. 7) to cut kerfs ⅝" deep at the four corners for the splines. Then cut the splines to size to fit the kerf and glue and clamp them in place, see Detail in Fig. 7.

THE POUCH BASES

After the carrier frame was assembled, I made the two bases (E) that form the bottoms of the side "pouches". These bases are made from ½"-thick stock, see Fig. 8.

Shop Note: If ½"-thick stock is not available, you can make the base by resawing 4/4 stock. First, cut three pieces of 4/4 stock 1¾" wide by 16" long. Then turn these pieces on edge and resaw them to a thickness of just over ½". Edge-glue these pieces together, and when the glue is dry, plane the bases flat, and cut them to final size.

The final dimensions of the bases are taken from the assembled top frame. Cut the bases to length to match the front-to-back measurement of the frame, and to width to match the width of the "pouches" — from the side piece to the divider. (This should be 5", refer to Fig. 4.)

After the bases are cut to final size, round over the top edges with a ¼" round-over bit and the bottom edges with a ⅛" round-over bit, see Fig. 9.

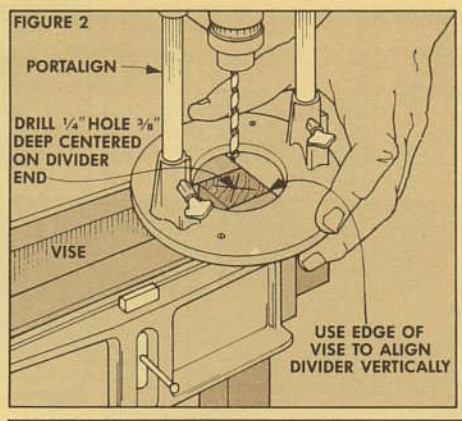

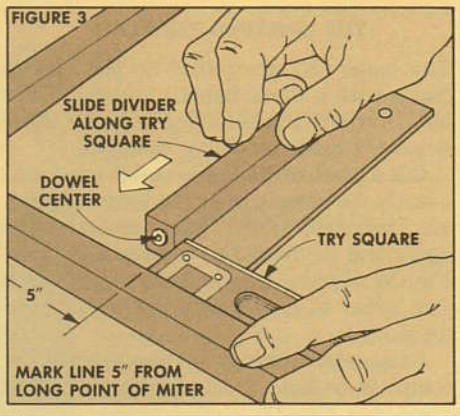

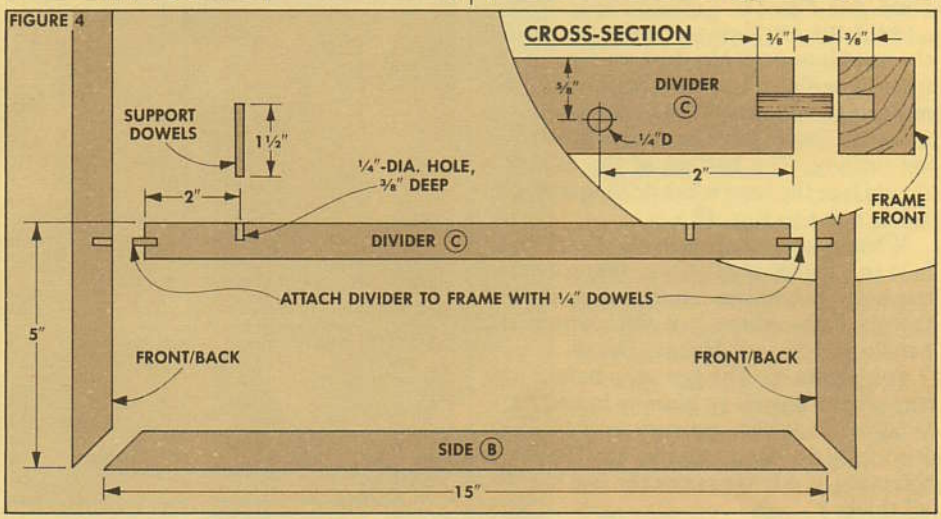

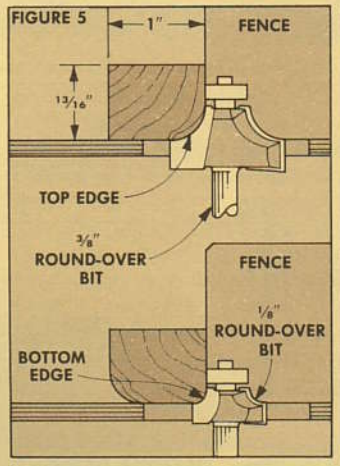

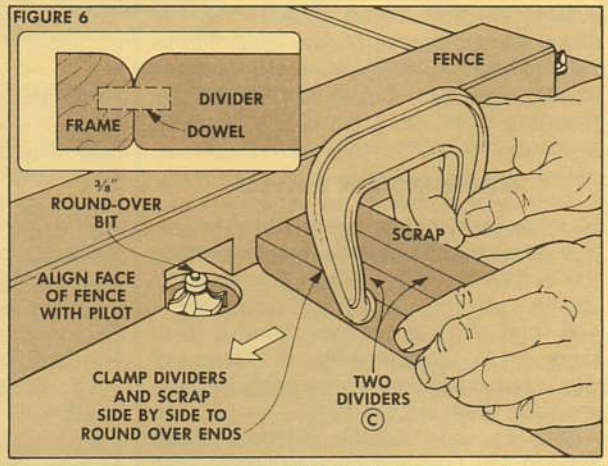

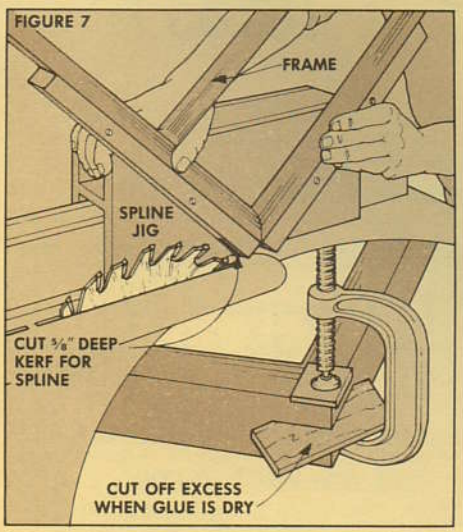

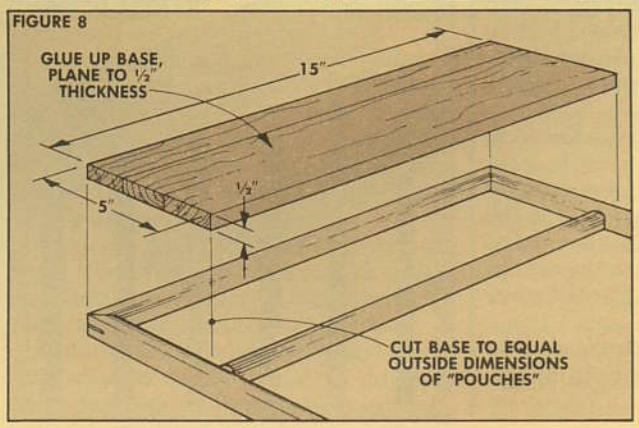

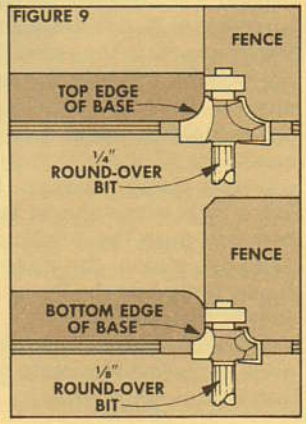

THE DRILLING TEMPLATE

The bases (E) are joined to the carrier frame with a whole bunch of dowels (56 in all). In order to position the holes for these dowels, I made a drilling template.

Cut a piece of 4/4 hardwood (I used oak) exactly the same size as the base, see Fig. 12. Then drill ¼"-dia. holes centered 1¼" apart and ⅜" from the outside edge, see Fig. 10. (It's best to drill these holes on a drill press to make sure they're perpendicular.)

I also added "wings" to the sides of the template to hold it steady on the workpiece, see Fig. 12.

DRILL HOLES. Now place the top face of the template over the bottom face of the frame, see Fig. 11. (Note: To ensure alignment of all the dowel holes, the top of the template should face the carrier frame during drilling. The bottom of the template should face the base when drilling its dowel holes, refer to Fig. 12.)

When the template is in place, drill each hole to a depth of ⅜". Note: When drilling the holes in the carrier frame, don't drill the six holes (three per side) where the handle will be, see Handle Detail.

THE HANDLES. The last step before putting all the dowels in place is to make the handles. To do this, cut a piece of 4/4 stock 1" wide by 6¼" long, see Fig. 13. Then turn this piece on edge to resaw the two handles ¼" thick.

To mount the handles, drill five ¼"-dia. dowel holes centered on the width of the handles and spaced 1¼" apart (the same as on the template). Finish the handles by rounding over the top edges with a ⅛" round-over bit, see Detail in Fig. 13.

MOUNTING THE DOWELS

Now the bases can be mounted to the carrier frame with ¼" dowels. I custom-made the dowels for this project, see previous article.

A total of 56 dowels are needed, 50 of them are 7¾" long and the six (three per side) used at the handles are only 5⅞" long, see Side View in Fig. 14.

The six short dowels (three on each handle) are fastened to the handle with wedges, see Handle Detail in Fig. 14. To do this, cut kerfs in the ends of the dowels for the wedges. (This is the same procedure used on the tray.)

I thought it would be a real hassle to mount all of these dowels, but it went smoother than I expected. Use a Q-Tip to dab a little white glue in each hole in the base and push the dowels into the holes. Then dab glue in the holes in the carrier frame, and press the frame over the other ends of the dowels.

FINISHING. After the dowels are glued in place, I applied two coats of tung oil varnish to the carrier frame.

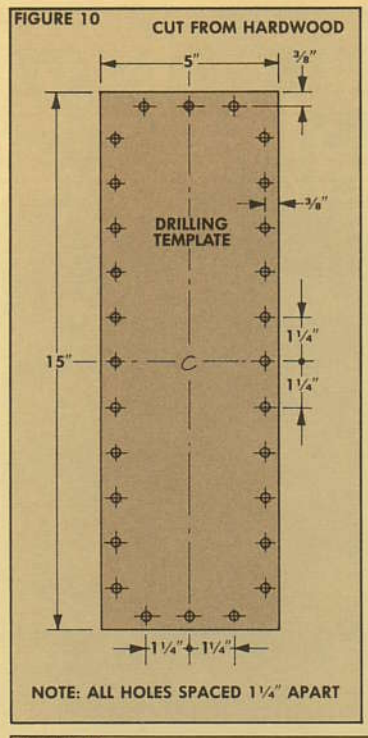

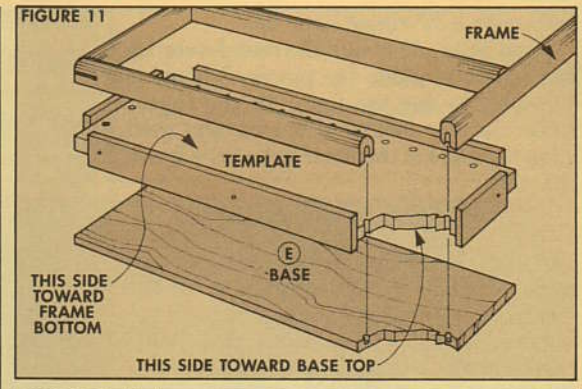

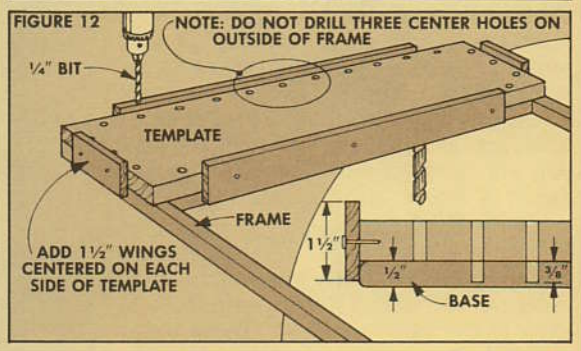

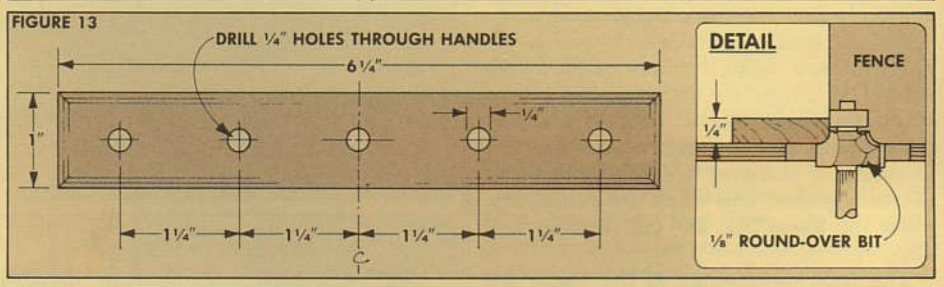

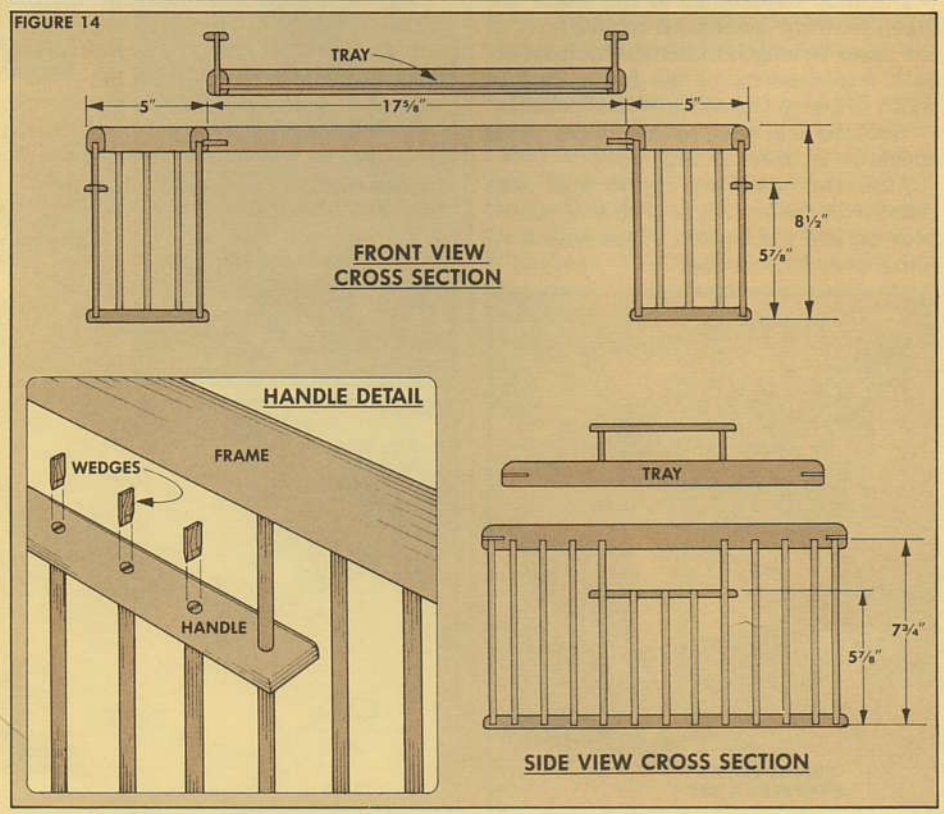

Finishing: Fillers

HOW TO GET A GLASS-SMOOTH SURFACE

In *Woodsmith* No. 38 we began our finishing series with an article on "Surface Preparation." About the time I was writing that article I received a letter from a reader asking why we didn't recommend using paste wood filler to prepare the surface of an oak project we featured. It got me thinking about fillers and sealers and why we haven't suggested using them more.

It's true, we often take the easy way out: "I used Watco Danish Oil" or "I applied two coats of Minwax Early American Stain and followed with Hope's Tung Oil Varnish." Let's face it, using an oil is easy: Put it on, wipe it off, and you're done. (Well, there's a little more to it than that, see *Woodsmith* Nos. 30 and 32.)

But we have another reason for using oils. They soak in and bring out the character of the wood for a more natural appearance — which seems appropriate for most of the projects we've built.

I've noticed, though, that there are times when oils don't create the finish I want. If I'm building an oak desk and need a glass-smooth writing suface, an oil finish probably isn't the best choice. To get a smooth surface on open-grained woods like oak, a filler is needed.

Note: Other open-grained woods include walnut, mahogany, ash, rosewood, chestnut, and butternut. These species have large open pores that are sliced in half (lengthwise) when they're sawn into lumber. Since the length of the pore is exposed, it's very difficult to create a glass-smooth surface. The pores need to be filled and sealed so they're flush with the surrounding area.

Okay, where's all this leading? I guess what I'm saying is that once you start using finishes other than penetrating oils and oil-varnish combinations, things can get a little complicated. But the advantages of a smooth, hard surface may be worth the extra effort.

PASTE WOOD FILLERS

The complications in obtaining a smooth finish start with paste wood fillers. (Paste wood filler shouldn't be confused with wood putty. That's used to fill holes or repair gouges. Paste wood filler is used to fill the open pores on the surface.)

Whenever asked about using paste wood fillers, my first advice is "don't." (I usually qualify that with "unless you *must* have a *perfectly smooth surface.*")

I'll never forget my first experience with paste wood filler on an oak desktop. I wondered what I had gotten myself into. It was terribly messy. Dirty rags were all over the shop. The filler was drying and the excess had to be wiped off before it got too hard. I began to wonder if my project would ever be the same. It was messy and a lot of work, but the smooth surface was worth it (I guess).

BASIC INGREDIENTS. Paste wood fillers consist of three (or four) materials: a filler, a binder, a solvent, and, in some cases, a pigmented coloring medium.

The filler is usually silex. Silex is crushed stone quartz that actually feels like very fine sand. The portion of the mixture that holds the silex and any pigments together after drying is called a binder. The binder in paste wood filler is usually Japaned white varnish.

When the filler is pushed down into the pores, the filler and binder form a tight interlocking substance. It bonds with the wood when the solvent evaporates.

Paste wood fillers are available in natural (a tan color) or pre-mixed in a variety of colors (see box on next page).

APPLYING FILLER

Before filler is applied, it's important to properly prepare the surface (see the article on surface preparation in *Woodsmith* No. 38). After final sanding, the pores will be filled up with fine dust. Use a soft cleaning brush, compressed air, or a vacuum to clean them out so they can accept the filler.

THINNING THE FILLER. To apply the filler, it has to be thinned so it can be worked down into the clean, open pores. From the can it's a very thick, goopy material — about the consistency of peanut butter (smooth, not chunky). I use naphtha as a thinner since it dries quickly, but some manufacturers recommend mineral spirits. Check the instructions on the can.

The actual ratio of thinner to solvent varies depending on the size of the pores (less solvent for large pores, more for small ones) and the brand of the paste wood filler. One of the fillers I like to use is Behlen's Pore-O-Pac Paste Wood Filler (see Sources, pg. 24).

When using this filler on oak, I mix it a little thicker than they suggest on the can. Instead of the suggested 50/50 mixture, I mix about four parts filler to only three parts naphtha in a wide mouth mayonnaise jar. On woods with smaller pores such as walnut and mahogany, I mix it 50/50 to get a little thinner mixture: about the consistency of heavy cream.

BRUSHING IT IN. After the filler is thinned, it's important to make sure it gets packed down tightly into the pores. Buy a cheap brush and cut down the bristles until they're very short and stiff. Fill up the brush with the thinned filler and pack it down into the pores.

First work with the grain, then brush across the grain leaving a thin layer of filler on the surface. Occasionally stir the thinned filler as you work.

REMOVING THE FILLER. Before too long (about five minutes with naphtha and more like 15 to 20 minutes with mineral spirits), the filler starts to look dull. Before it gets completely dry and hard, the filler has to be wiped off the surface — without pulling it out of the pores. It's always a race against time.

A piece of burlap is probably the best wiping rag, but any coarse cloth will work. (It needs to be abrasive enough to break up

the quickly drying gunk, and porous enough to hold lots of it.)

Wipe off *across* the grain to remove only the filler that's on the surface. Sometimes a *light* follow-up wiping *with* the grain may be necessary to remove any streaks. In corners, crevices, and moldings you may have to work with a piece of cloth wrapped around a sharpened dowel.

Shop Note: It's much easier (and quicker) to put the filler on than to wipe it off. If you apply it to a large area, the filler can dry hard at one end while you're scrambling to wipe off the other end. (If this happens, moisten it with the solvent to keep the surface wet.) I find it less frustrating if I work on a three square foot area, wipe, and then proceed.

Once all the surface filler is wiped off, check it by viewing at a low angle to the light. All the pores probably won't look completely filled and flat (that requires the surface finish), but it should look like it's almost filled. If it doesn't, mix up some more filler (make the mixture a little thinner this time) and apply it the same way to top off any unfilled pores.

With all the pores tightly packed with filler, allow the project to dry *completely*. This may take overnight or a couple days. Then sand (220 grit) very lightly and wipe with a naphtha-moistened rag to clean up the surface. Now it's ready to be sealed.

SEALERS AS LIQUID FILLERS

Sealers can be used in a number of ways: 1) They are applied before staining to limit penetration of the stain into the wood. Or, 2) after staining to provide a "cushion" between the stain and the top coat. Or, 3) on raw wood to provide a flat, smooth base for a top coat. (These uses of sealers will be covered in subsequent articles.)

But there's another role sealers can play — as a light (liquid) filler. In the first part of this article, I talked about using paste wood filler to obtain a smooth surface on *open-grained* woods.

This works to a point. But paste wood filler doesn't always fill up 100% of every pore. This leaves minute crevices on the surface of the wood that need topping off — with a sealer.

Also, when I'm working with *close-grained* woods — such as pine, maple, birch, and cherry — where filler isn't needed, I sometimes use a sealer to fill in the minute pores and level the surface.

If you want to use a sealer as a liquid filler, there are several products available. Those labelled just plain "sealer" provide a clear impenetrable base coat for stains and top coats. "Filler-sealers" usually contain silica and are thinned down, but clearer, versions of paste wood filler. Perhaps the most common over-the-counter product is called "sanding sealer."

SANDING SEALERS. The products labeled sanding sealer usually have a high percentage of copolymers to hasten the drying time. Sanding sealers also have zinc stearate added as a lubricant to make sanding easier. These two ingredients make sanding sealer do what it's supposed to do: dry quickly and sand easily to provide a smooth, even surface for the top coat.

Although this sounds great, there's one big disadvantage to sanding sealers: The very thing that makes them easy to sand, the stearate, can create adhesion problems. In fact, some top finishes may slide right off sanding sealer — polyurethane, for example will not adhere to a sanding sealer with stearates.

COMPATIBILITY. Another problem with sealers in general is compatibility. Most sealers are intended for lacquer, and are not compatible with varnish or polyurethane. However, there are sealers formulated specifically for varnish (see Sources, pg. 24). You have to check the label for compatibility.

A WASH COAT. All of these problems can be avoided by using a dilute (50/50) wash coat of the finish you plan to use as the top coat. I usually brush a mixture (half top finish, half solvent) right on the bare or filled wood. Any varnish, shellac, polyurethane, or lacquer can be thinned down and used as a wash coat without compatibility problems (i.e., varnish wash coat under varnish top coat, etc.)

Note: Shellac is often mentioned as a standard wash coat. But it's not compatible with polyurethane and many varnishes.

In general, sanding sealers are used by professionals who want to get a base coat down, sand it smooth, and get the top coat on — all in a few hours. But for those of us who aren't in a rush, and still want a glass-smooth finish, I've found that the *safest* approach to prevent compatibility problems is just to use a wash coat of the top finish as a sealer.

CONCLUSIONS

All of this filling and sealing can get to be a real pain. Why bother? Maybe you shouldn't . . . or maybe you should do what I do . . . use them selectively.

When I *must* have a glass-smooth surface, I use a paste wood filler on open-grained wood and top it off with a wash coat. And it never hurts to put a wash coat on any wood to get a stable, smooth surface before a top finish.

If I look for a reason to fill or seal, I can usually find one. But, whenever possible, I don't look.

FINISHING TIPS . . . *adding color to filler*

One of the biggest problems that comes up when working with paste wood filler is color. Should you use a stain when you use a filler? And if so, how?

Most of the books I've read recommend that you stain first and then apply a filler that's darker than the stain. However, this means you can't aggressively sand the filler flat with the rest of the surface—as you're sanding the filler, you'll also sand right through the stain.

Reversing the process doesn't solve the problem. If you apply a colored filler first, you can sand it down flat. But the filler tends to seal the wood so the stain can't soak in evenly to give the color you want.

So, what's the solution? I don't bother to use a stain at all when I use paste wood filler. Instead, I keep a supply of *natural* paste wood filler on hand and add a variety of pigments to it to create the shade I want. Enough of the color from the filler soaks into the area between the pores that the whole piece takes on a uniform color.

The two coloring materials I use are Japan colors and artist's oils, see Sources, pg. 24. Note: It's tempting to want to add an oil-based stain (like Minwax) to color the filler, but this can create problems. With oil stains you're adding a solvent along with the pigment, and you may wind up adding too much solvent to get the color you want, and extend the drying time.

Japan colors and artists' oils, on the other hand, are highly concentrated pigments suspended in a thick medium (about the consistency of peanut butter). They allow you to add color in small amounts — without diluting the filler.

The most common Japan colors I use are raw sienna (yellowish brown), burnt sienna (reddish brown), raw umber (light brown), burnt umber (dark brown) and Van Dyke (dark chocolate brown). By adding these colors a little bit at a time, you can obtain just about any shade.

It's best to be a little conservative with the color at first. Make it lighter than you think it should be and test it on a sample board. Then slowly bring in more color if you want it darker.

One of my favorite shades is similar to Minwax's Early American stain. To mix it, I thin ½ cup Behlen's Pore-O-Pac Natural Paste Wood Filler with ⅓ cup naphtha. (This is enough to cover about ten square feet of oak.)

Then I begin adding Behlen's Burnt Umber Japan Color. It takes about 1½ teaspoons to get the desired shade. The mixture looks like melted Hershey's chocolate in the can but is just the right color when it's applied to the wood.

Talking Shop

AN OPEN FORUM FOR COMMENTS AND QUESTIONS

CUTTING SMALL STRIPS

One of the most difficult operations on a table saw is cutting thin, narrow strips. I had to make several variations of this type of cut for the projects shown in this issue. I needed small splines for the tray, small square stock to make the dowels, and thin wedges to hold the dowels in place.

If the saw is set up so small strips like these are cut off between the blade and the fence, it's very likely that the strip will be trapped and thrown back (kickback).

Besides kickback, this type of cut is difficult to make because the strip is so small it's almost impossible to guide through the blade to get a uniform cut. But there are a couple solutions.

SET UP ON WASTE SIDE. One solution is to set up the cut so the strip is on the "waste" edge of the board. In this case, set up the first cut by measuring between the fence and the blade, see Fig. 1.

FIGURE 1

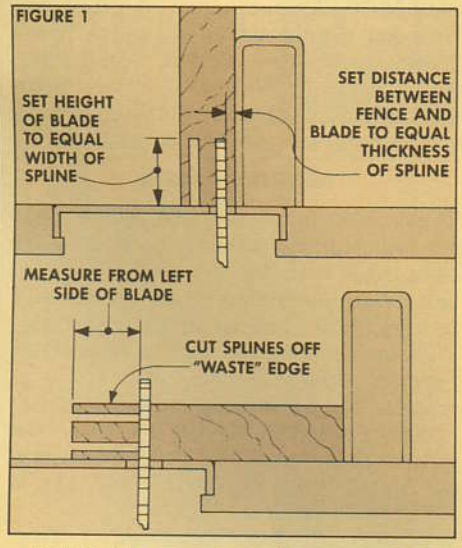

But for the second cut, the measurement must be taken on the outside (left) side of the blade. Then when the cut is made, the small strip just falls off on the waste side, with no danger of kickback.

PUSH JIG FOR SMALL STRIPS

The "waste edge" method is okay if you only need to cut one or two strips off one edge of the board. But this method becomes tedious if you want to cut a lot of strips because you have to measure and re-adjust the fence after each cut.

This is the problem I faced when I had to cut a whole bunch of strips 5/16" x 5/16" square to make the dowels (shown on page 16). Since all of these strips had to be exactly the same size, I needed a better method than the "waste edge" approach.

The solution was a special push jig for small pieces, see Fig. 2. This jig rides over the fence and guides pieces as small as 1/8" x 1/8" securely through the blade with no danger of kickback.

To make the jig, cut a block about 8" long and 1/4" wider than the table saw's fence. Then cut a 1/4"-deep notch on one edge to mount a sliding hold-down.

To cut this notch, I used a dado blade (set to a depth of 1/4") and made multiple passes, starting and stopping 1/2" from each end.

FIGURE 2

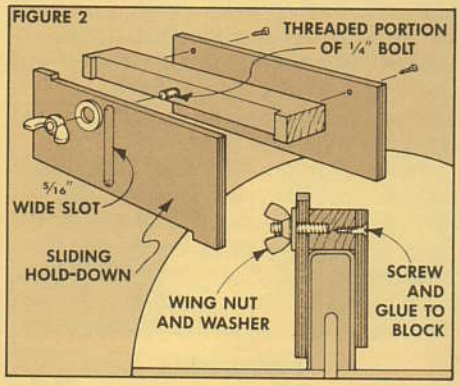

After this notch is cut, cut a piece of 1/4" Masonite long enough to fit the notch, and wide enough to extend to the surface of the table. Note: Cut this hold-down with "heels" on both edges. As one edge gets worn, just flip the piece over to use the other edge. For very narrow pieces, I also cut a hold-down out of 1/8" Masonite.

Then to mount this piece in the notch, drill a pilot hole centered in the notch, and screw a hex-head bolt in the hole. (Although this may not seem proper, the threads will "screw" into the wood.)

Screw in the bolt far enough so about 1/2" of the threads are left sticking out. Then cut off the shank (unthreaded part) and the head of the bolt.

Shop Note: Whenever you cut a threaded piece to length, the end gets all goofed up so it's difficult to thread on a nut. To solve this problem, thread on a nut first, then cut the piece to length and unscrew the nut. As the nut comes off it will "clean" the threaded end.

Now, in order to mount the sliding hold-down, drill a series of 5/16" holes to form a slot that fits over the threads of the bolt. Mount the hold-down over the bolt and hold it in place with a washer and wing nut. Then screw and glue another piece of Masonite to the right side of the block to hold it against the fence.

To cut narrow pieces, slide the hold-down over the stock and tighten the wing nut, see Fig. 3. I also use a small guide

FIGURE 3

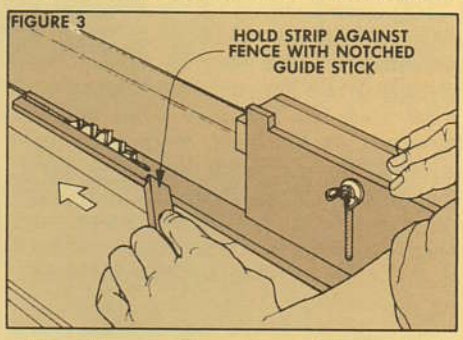

stick with a notch on the end to push the workpiece tight against the fence as the jig pushes it through the blade.

WEDGED DOWELS

If you remember Tinker Toys, you know the whole theory behind the wedged dowels we used for the "breakfast in bed" tray and carrier (see pages 14 and 18).

This project involved what should be a very simple operation: putting the end of a 1/4"-dia. dowel in a 1/4"-dia. hole. But this never seems to work the way it should. The dowel is always a tad too big or a smidgen too small to fit just right.

To solve this problem, I used an enhanced version of the Tinker Toy method — just cut a kerf in the end of the dowel and add a wedge.

To make sure the kerf is centered on the dowel, I used a small holding jig, see Fig. 4. Start by cutting a guide kerf with the back saw about 1" from the end and 1/4" deep. Then drill a hole the same size as the dowel, centered on this kerf.

FIGURE 4

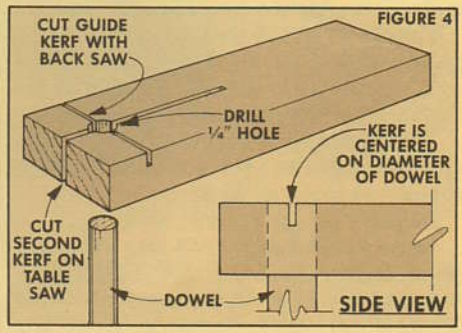

To clamp the dowel in this hole, cut another kerf that goes through the center of the hole. Now, slide the dowel in the hole, clamp the sides of the jig tight around the dowel, and use a back saw to cut a kerf in the end for a wedge.

Sources

FINISHING THE SWING/GLIDER

When it was time to finish the porch swing and glider base, we decided to take a look back at the article we did two years ago on outdoor finishes (*Woodsmith* No. 27).

That issue featured a redwood and cedar picnic table, chairs, and outdoor bench. We recommended that they be finished with Olympic Wood Preservative (Clear).

Ted took the furniture home and put them out on his deck. Within a couple months' time, problems developed. First, the colors started fading. Then, dirty stains appeared. And finally, water rings showed up wherever a wet glass had been set down. He ended up sanding and recoating the set twice each year.

The problem is that the outdoor wood preservatives and stains we discussed in *Woodsmith* No. 27 are designed to *preserve* the wood. But they just don't stand up to the wear and tear associated with outdoor furniture. And they're not formulated to work on hardwoods — like the oak we used for the swing and glider.

There's a better answer for both hardwoods and softwoods: spar varnish. This is an excellent finish to use on outdoor furniture, for three reasons. First, it's waterproof, so it stands up to repeated cycles of rain and sun. Boatbuilders use it to finish boats used in salt water. Second, it's both tough and elastic. It resists surface wear and tear and allows the wood to expand and contract without cracking the finish (as sometimes happens with polyurethane). And finally, most spar varnishes contain ultraviolet inhibitors to prevent the sun's rays from discoloring the wood.

Spar varnish is available at many hardware and paint stores. *Pratt & Lambert's No. 61 Spar Varnish* and *Pittsburgh Paint's "Rez" Spar Varnish* are a couple national brands we found locally.

The spar varnish we used on the swing and glider is *Behlen's Water White Restoration Varnish*. Water white refers to the fact that it's clearer than most varnishes.

Note: Behlen's is very thin — but many spar varnishes are thicker and should be thinned as much as 50/50.

Behlen's can be ordered from:

WOOD FINISHING SUPPLY CO., INC., 1267 Mary Drive, Macedon, NY 14502; (315) 986-4517 (Catalog: $2.50). *Behlen's Water White Restoration Varnish*, Order No. B603-22756 (quart), $10.20; Order No. B603-22757 (gallon), $25.88.

Most spar varnishes contain a mixture of tung oil and linseed oil. *Sutherland Welles' Tung Oil Varnish (Exterior)* only has tung oil (which makes it expensive, but very durable.) Sutherland Welles also makes a *Polymerized Exterior Tung Oil* that penetrates into the wood rather than forming a surface coat. Both can be ordered from:

GARRETT WADE CO., INC., 161 Avenue of the Americas, New York, NY 10013; 800-221-2942 (Catalog: $3.00). *Tung Oil Varnish (Exterior)*, Order No. 99R13.01, $21.45 (qt.). *Polymerized Exterior Tung Oil*, Order No. 99R14.01, $20.90 (qt.).

SCRAPERS

You can order hand scrapers from:

GARRETT WADE, CO., INC., (see address above). *Curved Scrapers*, Set of 2, Order No. 70K06.01, $4.10 per set. *Swedish Scrapers*, 2¼" x 5" and 2¼" x 6", Order No. 71K01.01, $3.90 per set. *Sandvik Scraper*, 2½" x 6", Order No. 19K02.01, $4.35.

SEARS, ROEBUCK AND CO., (1984/85 Tool Catalog). *Three-Piece Scraper Set*, (curved, round-end, and straight), Order No. 9 GT 37014, $5.99 per set.

W.S. JENKS & SON, 738 7th St. N.W., Washington, DC 20001; 800-638-6405. *Disston Scraper*, 3" x 5", Order No. 20-3x5, $1.95.

U.S. GENERAL SUPPLY CORP., 100 Commercial Street, Plainview, NY 11803; 800-645-7077 (Catalog: $2.00). *Stanley Scraper*, 3" x 5", Order No. 23895, $4.99.

BURNISHERS

You can order burnishers from:

GARRETT WADE, CO., INC. (see address above). *Round Burnisher*, Order No. 19K05.01, $5.90. *Triangular Burnisher*, Order No. 19K03.01, $5.90.

SEARS, ROEBUCK AND CO., (1984/85 Tool Catalog). *Round Burnisher*, Order No. 9 GT 37015, $7.99.

THE FINE TOOL SHOPS, INC., 20 Backus Avenue, Box 1262, Danbury, CT 06810; 800-243-1037. *Oval Burnisher*, Order No. 103-0330, $7.95.

MILL FILES

In the article on sharpening scrapers, we recommended using a *Nicholson 10" Smooth Cut Mill File*. Most local hardware stores carry this file or can get it.

The Sears 1984/85 Tool Catalog has a *Craftsman 10" Smooth Cut Mill File* for $4.29 (Order No. 9 GT 31278).

Garrett Wade (address above) recommends using their *Second Cut Mill File* for squaring the edge of scrapers before honing. Its price is $5.70 (Order No. 62W13.01).

PASTE WOOD FILLER

Locally, I found *Benjamin Moore's Benwood Paste Wood Filler* and *Pratt & Lambert's F24 Natural Paste Wood Filler* in half-pints, quarts, and gallons. Sherwin-Williams carries *Sher-Wood Natural Filler* in gallons only.

Order Behlen's Pore-O-Pac from:

WOOD FINISHING SUPPLY CO., INC., (see address above). *Behlen's Pore-O-Pac Paste Wood Filler*, Natural, Order No. B744-04F16 (quart), $9.30; Order No. B744-04F17 (gallon), $26.70. They also carry seven colored paste wood fillers.

Naphtha or VM & P (varnish makers' and painters') naphtha is recommended to thin most paste wood fillers. If it isn't available locally, you can order it from Wood Finishing Supply. *Behlen's Naphtha*, Order No. B650-0056 (quart), $4.50; Order No. B650-0057 (gallon), $12.00.

Japan Colors can be used to tint natural paste wood filler (see box at bottom of page 22). Wood Finishing Supply offers 19 Japan Colors (see catalog). We mentioned *Behlen's Burnt Umber Japan Color*, Order No. B560-14334 (½ pt.), $6.38.

Artists' oil colors also can be used to tint paste wood filler. They're available in toothpaste-style tubes (usually 1.25 fl. oz.) from art supply stores. Common brand names are Liquitex, Bellini, Grumbacher, and Windsor & Newton's. Prices range from $2 to $7, but earth colors (the siennas and umbers) are the least expensive.

SANDING SEALER

The problem in selecting the correct sanding sealer is compatibility — it must be compatible with the top coat. Those labelled "lacquer sanding sealer" should only be used under a lacquer top coat. Sherwin-Williams, for example, makes *Sher-Wood Lacquer Sanding Sealer*.

Order lacquer sanding sealer from:

WOOD FINISHING SUPPLY CO., INC., (see address above). *Behlen's Qualalacq Sanding Sealer*, Order No. B611-02007, $18.38 per gallon.

Those labelled "sanding sealer" or "vinyl sanding sealer" usually can be used under varnishes. Some state on the can that they may be used under polyurethanes. Others are specific that they should *not* be used under any urethane varnishes.

Sherwin-Williams makes *Sher-Wood Vinyl Sanding Sealer* ($21.90 per gallon) and Pratt and Lambert makes *E36 Filler/Sealer* ($7.94 per quart, $23.44 per gallon) and *H40 Sanding Sealer* ($5.83 per quart, $17.00 per gallon).

You can order vinyl sanding sealer from:

THE WOODWORKERS' STORE, 21801 Industrial Boulevard, Rogers, MN 55374; (612) 428-4101 (Catalog: $2.00). *McCloskey's Clear Sanding Sealer*, Order No. P1240, $9.75 per quart, $24.95 per gallon.